SONY

4-488-657-**19** (1)
2024-09

Hybrid Graphic Printer

Instructions for Use

Before operating the unit, please read this manual thoroughly and retain it for future reference.

UP-991AD/UP-971AD

CE UKCA

© 2014 Sony Corporation

Indications for Use/Intended Use

The Sony UP-971AD and UP-991AD are compact, medical grade black and white printers that can accept both analog and digital signal inputs. They are designed to be integrated into radiology imaging systems such as mobile c-arm, ultrasound, cardiac cath lab and other compatible medical imaging systems and produce hard copy prints of still images captured by these systems for the patient record or for referrals.

Notes

- Output images from this equipment cannot be used for diagnostic use.
- This equipment is for medical professionals.
- This equipment is intended for use in medical environments, such as clinics, examination rooms, and operating rooms.

WARNING

To reduce the risk of fire or electric shock, do not expose this equipment to rain or moisture.

To avoid electrical shock, do not open the cabinet. Refer servicing to qualified personnel only.

No modification of this equipment is allowed.

WARNING

To avoid the risk of electric shock, this equipment must only be connected to a supply mains with protective earth.

WARNING

To disconnect the main power, unplug the power plug. When installing the unit, incorporate a readily accessible disconnect device in the fixed wiring, or connect the power plug to an easily accessible socket-outlet near the unit.
Do not position the ME equipment where it is difficult to unplug the power plug.
If a fault should occur during operation of the unit, operate the disconnect device to switch the power supply off, or disconnect the power plug.

Symbols on the product



Consult the instructions for use
Follow the directions in the instructions for use for parts of the unit on which this symbol appears.



This symbol indicates the manufacturer, and appears next to the manufacturer's name and address.



This symbol indicates the date of manufacture.



This symbol indicates the serial number.



This symbol indicates the Unique Device Identifier (UDI), and appears next to the bar code representation of the Unique Device Identification.



This symbol indicates the equipotential terminal which brings the various parts of a system to the same potential.



Storage and transport temperature
This symbol indicates the acceptable temperature range for storage and transport environments.



Storage and transport humidity
This symbol indicates the acceptable humidity range for storage and transport environments.



Storage and transport pressure
This symbol indicates the acceptable atmospheric pressure range for storage and transport environments.



This symbol indicates the Importer, and appears next to the Importer's name and registered office address.



This symbol indicates the European Community representative, and appears next to the European Community representative's name and address.



This symbol indicates the UK Responsible Person, and appears next to the UK Responsible Person's name and address.



This symbol indicates the Swiss authorized representative, and appears next to the Swiss authorized representative's name and address.



This symbol indicates the medical device in the European Community.



This symbol indicates sharp edges.

For accessories

LOT This symbol indicates the batch code.



This symbol indicates “Do not reuse”.

For customers in the U.S.A.

This equipment has been tested and found to comply with the limits for a Class A digital device, pursuant to part 15 of the FCC Rules. These limits are designed to provide reasonable protection against harmful interference when the equipment is operated in a commercial environment. This equipment generates, uses and can radiate radio frequency energy and, if not installed and used in accordance with the instruction manual, may cause harmful interference to radio communications. Operation of this equipment in a residential area is likely to cause harmful interference in which case the user will be required to correct the interference at his own expense.
You are cautioned that any changes or modifications not expressly approved in this manual could void your authority to operate this equipment.
All interface cables used to connect peripherals must be shielded in order to comply with the limits for a digital device pursuant to Subpart B of part 15 of FCC Rules.

For customers in the U.S.A.

Caution

Federal law (United States of America) restricts this device to sale by or on the order of a licensed healthcare practitioner.

℞
ONLY

For customers in Canada

This unit has been certified according to Standard CAN/CSA-C22.2 No.60601-1.

For customers in Europe

Any serious incident that has occurred in relation to the device should be reported to the manufacturer and the competent authority of the Member State in which the user and/or patient is established.

Important safeguards and notices for use in the medical environments

1. All devices connected to the unit must be certified or compliant according to IEC 60601-1, IEC 60950-1, IEC 62368-1 and IEC 60065 standards and other IEC/ISO standards applicable to the devices.

2. Furthermore, the system as a whole must comply with IEC 60601-1 standards. All peripheral devices connected to the signal input/output sections of the unit constitute the medical-use system, and therefore, the user is responsible for ensuring that the system as a whole complies with IEC 60601-1 standards. If in doubt, consult qualified Sony service personnel.

3. Connecting the unit to other devices may increase the leakage current.

4. For all peripheral devices connected to the unit that operate on commercial power supplies and do not comply with IEC 60601-1 standards, incorporate an isolation transformer that complies with IEC 60601-1 standards and connect to the commercial power supply via the transformer.

5. The unit generates, uses, and may radiate radio frequency energy. If it is not installed and used in accordance with the instruction manual, it may cause interference on other devices. If the unit causes interference (which can be determined by disconnecting the power cord from the unit), try the following.
   – Relocate the unit with respect to the affected devices.
   – Connect the unit and the affected devices to different branch circuits.
   For more information, consult qualified Sony service personnel.
   (Applicable standard: IEC 60601-1-2)

Important EMC notices for use in medical environments

- The UP-991AD/UP-971AD needs special precautions regarding EMC and needs to be installed and put into service according to the EMC information provided in the instructions for use.
- The UP-991AD/UP-971AD is intended for use in a professional healthcare facility environment.
- Portable and mobile RF communications equipment, such as cellular phones, can affect the UP-991AD/UP-971AD.

Warning

- Portable RF communications equipment should be used no closer than 30 cm (12 inches) to any part of the UP-991AD/UP-971AD. Otherwise, degradation of the performance of this equipment could result.
- If the UP-991AD/UP-971AD will be used adjacent to or stacked with other equipment, normal operation of the UP-991AD/UP-971AD under such configurations should be verified via observation.
- The use of accessories and cables other than those specified, with the exception of replacement parts sold by Sony Corporation, may result in increased emissions or decreased immunity of the UP-991AD/UP-971AD.

<table>
<tr><th colspan="3">Guidance and manufacturer's declaration – electromagnetic emissions</th></tr>
<tr><td colspan="3">The UP-991AD/UP-971AD is intended for use in the electromagnetic environment specified below. The customer or the user of the UP-991AD/UP-971AD should assure that it is used in such an environment.</td></tr>
<tr><td>Emission test</td><td>Compliance</td><td>Electromagnetic environment – guidance</td></tr>
<tr><td>RF emissions

CISPR 11</td><td>Group 1</td><td>The UP-991AD/UP-971AD uses RF energy only for its internal function. Therefore, its RF emissions are very low and are not likely to cause any interference in nearby electronic equipment.</td></tr>
<tr><td>RF emissions

CISPR 11
CISPR 32</td><td>Class B</td><td rowspan="3">The UP-991AD/UP-971AD is suitable for use in all establishments, including domestic establishments and those directly connected to the public low-voltage power supply network that supplies buildings used for domestic purposes.</td></tr>
<tr><td>Harmonic emissions

IEC 61000-3-2</td><td>Class A</td></tr>
<tr><td>Voltage fluctuations/
flicker emissions

IEC 61000-3-3</td><td>Complies</td></tr>
</table>

Guidance and manufacturer's declaration – electromagnetic immunity			
The UP-991AD/UP-971AD is intended for use in the electromagnetic environment specified below. The customer or the user of the UP-991AD/UP-971AD should assure that it is used in such an environment.			
Immunity test	IEC 60601 test level	Compliance level	Electromagnetic environment – guidance
Electrostatic discharge (ESD) IEC 61000-4-2	±8 kV contact ±15 kV air	±8 kV contact ±15 kV air	Floors should be wood, concrete or ceramic tile. If floors are covered with synthetic material, a relative humidity of at least 30% is recommended.
Electrical fast transient/burst IEC 61000-4-4	±2 kV for power supply lines ±1 kV for input/ output lines	±2 kV for power supply lines ±1 kV for input/ output lines	Mains power quality should be that of a typical commercial or hospital environment.
Surge IEC 61000-4-5	±1 kV line(s) to line(s) ±2 kV line(s) to earth	±1 kV differential mode ±2 kV common mode	Mains power quality should be that of a typical commercial or hospital environment.
Voltage dips, short interruptions and voltage variations on power supply input lines IEC 61000-4-11	0% U_T (100% dip in U_T) for 0.5/1 cycles [a] 40% U_T (60% dip in U_T) for 5 cycles 70% U_T (30% dip in U_T) for 25/30 cycles [a] (for 0.5 sec) 0% U_T (100% dip in U_T) for 250/300 cycles [a] (for 5 sec)	0% U_T (100% dip in U_T) for 0.5/1 cycles [a] 40% U_T (60% dip in U_T) for 5 cycles 70% U_T (30% dip in U_T) for 25/30 cycles [a] (for 0.5 sec) 0% U_T (100% dip in U_T) for 250/300 cycles [a] (for 5 sec)	Mains power quality should be that of a typical commercial or hospital environment. If the user of the UP-991AD/UP-971AD requires continued operation during power mains interruptions, it is recommended that the UP-991AD/UP-971AD be powered from an uninterruptible power supply or a battery.
Power frequency (50/60 Hz) magnetic field IEC 61000-4-8	30 A/m	30 A/m	Power frequency magnetic fields should be at levels characteristic of a typical location in a typical commercial or hospital environment.
Proximity magnetic fields IEC 61000-4-39	65 A/m 134.2 kHz Pulse modulation 2.1 kHz 7.5 A/m 13.56 MHz Pulse modulation 50 kHz	65 A/m 134.2 kHz Pulse modulation 2.1 kHz 7.5 A/m 13.56 MHz Pulse modulation 50 kHz	Proximity magnetic fields of the UP-991AD/ UP-971AD should be at levels characteristic of a typical location in a typical commercial or hospital environment.
NOTE: U_T is the a.c. mains voltage prior to application of the test level.			
a For example, 10/12 means 10 cycles at 50 Hz or 12 cycles at 60 Hz.			

Guidance and manufacturer's declaration – electromagnetic immunity			
The UP-991AD/UP-971AD is intended for use in the electromagnetic environment specified below. The customer or the user of the UP-991AD/UP-971AD should assure that it is used in such an environment.			
Immunity test	IEC 60601 test level	Compliance level	Electromagnetic environment – guidance
			Portable and mobile RF communications equipment should be used no closer to any part of the UP-991AD/ UP-971AD, including cables, than the recommended separation distance calculated from the equation appliance to the frequency of the transmitter. **Recommended separation distance**
Conducted RF IEC 61000-4-6	3 Vrms 150 kHz to 80 MHz outside ISM bands [c] 6 Vrms 150 kHz to 80 MHz in ISM bands [c]	3 Vrms 6 Vrms	$d = 1.2 \sqrt{P}$
Radiated RF IEC 61000-4-3	3 V/m 80 MHz to 2.7 GHz	3 V/m	IEC 60601-1-2: 2007 $d = 1.2 \sqrt{P}$ 80 MHz to 800 MHz $d = 2.3 \sqrt{P}$ 800 MHz to 2.5 GHz IEC 60601-1-2: 2014 + A1: 2020 $d = 2.0 \sqrt{P}$ 80 MHz to 2.7 GHz Where P is the maximum output power rating of the transmitter in watts (W) according to the transmitter manufacturer and d is the recommended separation distance in meters (m). Field strengths from fixed RF transmitters, as determined by an electromagnetic site survey, [a] should be less than the compliance level in each frequency range. [b] Interference may occur in the vicinity of equipment marked with following symbol: 
NOTE 1: At 80 MHz and 800 MHz, the higher frequency range applies. NOTE 2: These guidelines may not apply in all situations. Electromagnetic propagation is affected by absorption and reflection from structures, objects and people.			

a Field strengths from fixed transmitters, such as base stations for radio (cellular/cordless) telephones and land mobile radios, amateur radio, AM and FM radio broadcast and TV broadcast cannot be predicted theoretically with accuracy. To assess the electromagnetic environment due to fixed RF transmitters, an electromagnetic site survey should be considered. If the measured field strength in the location in which the UP-991AD/UP-971AD is used exceeds the applicable RF compliance level above, the UP-991AD/UP-971AD should be observed to verify normal operation. If abnormal performance is observed, additional measures may be necessary, such as reorienting or relocating the UP-991AD/UP-971AD.

b Over the frequency range 150 kHz to 80 MHz, field strengths should be less than 3 V/m.

c The ISM (industrial, scientific and medical) bands between 150 kHz and 80 MHz are 6.765 MHz to 6.795 MHz; 13.553 MHz to 13.567 MHz; 26.957 MHz to 27.283 MHz; and 40.66 MHz to 40.70 MHz.

Recommended separation distances between portable and mobile RF communications equipment and the UP-991AD/UP-971AD

The UP-991AD/UP-971AD is intended for use in an electromagnetic environment in which radiated RF disturbances are controlled. The customer or the user of the UP-991AD/UP-971AD can help prevent electromagnetic interference by maintaining a minimum distance between portable and mobile RF communications equipment (transmitters) and the UP-991AD/UP-971AD as recommended below, according to the maximum output power of the communications equipment.

Rated maximum output power of transmitter W	Separation distance according to frequency of transmitter m				
	IEC 60601-1-2 : 2007			IEC 60601-1-2 : 2014 + A1: 2020	
	150 kHz to 80 MHz $d = 1.2 \sqrt{P}$	80 MHz to 800 MHz $d = 1.2 \sqrt{P}$	800 MHz to 2.5 GHz $d = 2.3 \sqrt{P}$	150 kHz to 80 MHz $d = 1.2 \sqrt{P}$	80 MHz to 2.7 GHz $d = 2.0 \sqrt{P}$
0.01	0.12	0.12	0.23	0.12	0.20
0.1	0.38	0.38	0.73	0.38	0.63
1	1.2	1.2	2.3	1.2	2.0
10	3.8	3.8	7.3	3.8	6.3
100	12	12	23	12	20

For transmitters rated a maximum output power not listed above, the recommended separation distance d in meters (m) can be estimated using the equation applicable to the frequency of the transmitter, where P is the maximum output power rating of the transmitter in watts (W) according to the transmitter manufacturer.

NOTE 1: At 80 MHz and 800 MHz, the separation distance for the higher frequency range applies.

NOTE 2: These guidelines may not apply in all situations. Electromagnetic propagation is affected by absorption and reflection from structures, objects and people.

Guidance and manufacturer's declaration – electromagnetic immunity					
The UP-991AD/UP-971AD is intended for use in an electromagnetic environment in which radiated RF disturbances are controlled. Portable RF communications equipment should be used no closer than 30 cm (12 inches) to any part of the UP-991AD/UP-971AD. Otherwise, degradation of the performance of this equipment could result.					
Immunity test	Band [a]	Service [a]	Modulation	IEC 60601 test level	Compliance level
Proximity fields from RF wireless communications equipment IEC 61000-4-3	380 – 390 MHz	TETRA 400	Pulse modulation 18 Hz	27 V/m	27 V/m
	430 – 470 MHz	GMRS 460 FRS 460	FM ±5 kHz deviation 1 kHz sine	28 V/m	28 V/m
	704 – 787 MHz	LTE Band 13, 17	Pulse modulation 217 Hz	9 V/m	9 V/m
	800 – 960 MHz	GSM 800/900 TETRA 800 iDEN 820 CDMA 850 LTE Band 5	Pulse modulation 18 Hz	28 V/m	28 V/m
	1,700 – 1,990 MHz	GSM 1800 CDMA 1900 GSM 1900 DECT LTE Band 1, 3, 4, 25 UMTS	Pulse modulation 217 Hz	28 V/m	28 V/m
	2,400 – 2,570 MHz	Bluetooth WLAN 802.11 b/g/n RFID 2450 LTE Band 7	Pulse modulation 217 Hz	28 V/m	28 V/m
	5,100 – 5,800 MHz	WLAN 802.11 a/n	Pulse modulation 217 Hz	9 V/m	9 V/m
NOTE: These guidelines may not apply in all situations. Electromagnetic propagation is affected by absorption and reflection from structures, objects and people.					
a For some services, only the uplink frequencies are included.					

Caution

When you dispose of the unit or accessories, you must obey the laws in the relative area or country and the regulations in the relative hospital regarding environmental pollution.

Warning on power connections

Use a proper power cord for your local power supply.

1. Use the approved Power Cord (3-core mains lead) / Appliance Connector / Plug with earthing-contacts that conforms to the safety regulations of each country if applicable.
2. Use the Power Cord (3-core mains lead) / Appliance Connector / Plug conforming to the proper ratings (Voltage, Ampere).

If you have questions on the use of the above Power Cord / Appliance Connector / Plug, please consult a qualified service personnel.

Warning on power connections for medical use

Customers in the U.S.A. and Canada should use the following type of power cord.
Customers in other countries or regions should use the power cord prescribed by their country or region.

	U.S.A. and Canada
Plug type	HOSPITAL GRADE*
Cord type	Min. Type SJT
	Min. 18 AWG
Minimum rating for plug and appliance couplers	10 A / 125 V
Safety approval	UL Listed and CSA

* Note: Grounding reliability can only be achieved when the equipment is connected to an equivalent receptacle marked “Hospital Only” or “Hospital Grade”.



Caution

Do not use the device in a MR (Magnetic Resonance) environment.
It may cause a malfunction, fire, and unwanted movement.

This equipment is not suitable for use in locations where children are likely to be present.

For the State of California, USA only

Perchlorate Material – special handling may apply, See www.dtsc.ca.gov/hazardouswaste/perchlorate

For the customers in Taiwan only



廢電池請回收

For the customers in the U.S.A.

SONY LIMITED WARRANTY - Please visit www.sony.com/psa/warranty for important information and complete terms and conditions of Sony’s limited warranty applicable to this product.

For the customers in Canada

SONY LIMITED WARRANTY - Please visit www.sony.com/psa/warranty for important information and complete terms and conditions of Sony’s limited warranty applicable to this product.

For the customers in Europe

Sony Europe B.V. - Standard Warranty and Exceptions on Standard Warranty. Please visit https://pro.sony/support-services/primesupport/support-professional-solutions-europe-standard-product-warranty for important information and complete terms and conditions.

For the customers in Korea

SONY LIMITED WARRANTY - Please visit https://pro.sony/ko_KR/support-services for important information and complete terms and conditions of Sony’s limited warranty applicable to this product.

Table of Contents

Getting Started

Overview 11
Location and Function of Parts and Controls 12
UP-991AD 12
UP-971AD 13

Preparation

Loading Paper in the Unit 16

Connections

Connecting to video devices 18
Connecting to a computer 19
Connecting to the USB Connector 19

Operation

Adjustments and Settings Using the Menu 20
Menu structure and layer 21
Menu List 22
Basic Menu Operations 26
Registering Menu Settings 27
Printing the Menu List 28
Printing 29
Starting a Print Job of Video Images 29
Printing digital images from a computer 32
Adjusting print image quality 32
Storing Image Data on a USB Flash Drive (UP-991AD only) 35
Storing Image Data on a USB Flash Drive 35

Others

Precautions 37
On Safety 37
On the Printer Carriage 37
On Installation 37
About the battery (UP-991AD only) 37
Cleaning the Cabinet 37
Cleaning the Thermal Head 38
Cleaning the Platen Roller 38
Paper 39
Paper You Can Use 39
Specifications 40
UP-991AD 40
UP-971AD 41
License 43
Troubleshooting 45
Error Messages 46
Index 47

Overview

This unit is a printer that prints images by heating a thermal head, according to the input image data, and pressing the head against special thermal printing paper to print the image on the paper. It features the following characteristics.

Stable, high-quality printing

- Capable of high-resolution images of 12.8 dots/mm.
- 8-bit processing provides monochrome printing with up to 256 shades of gradation.

A variety of printing modes

Single-picture mode



Side mode



Reverse mode

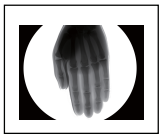

Multi-picture mode

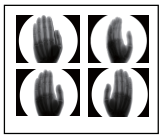

A change of settings makes available an even greater number of print modes (see page 29).

Supports both video and digital input

- Prints captured images from color or monochrome video signals in NTSC or PAL format.
- Prints the image from a computer which is compatible with Hi-Speed USB (USB 2.0 compatible).

Easy picture quality adjustment function

By printing nine images as one page of which the parameter is changed in picture quality adjustment menu, you can select the most suitable adjustment.

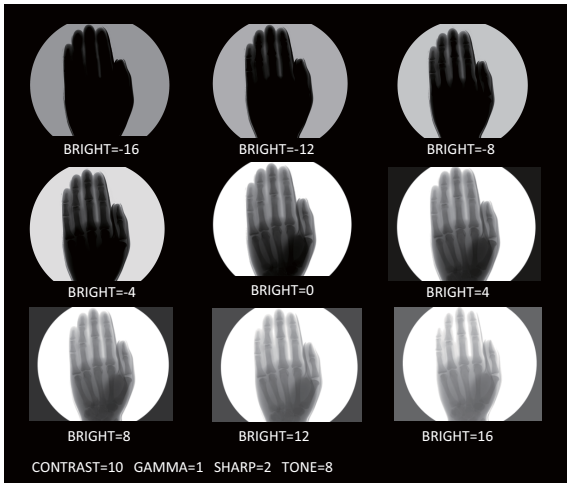

Setting menu history function

Saves the last five menus that were used, allowing for easy access to them next time.

Long-length picture printing

Supports 600 mm length digital printing.

Picture data to USB Flash Drive save function (UP-991AD only)

Saves picture print data of both video and digital mode to USB Flash Drive simultaneously when printing.

Auto cut function (UP-991AD only)

Automatically cuts the paper when printing completes.

Backlight of the buttons

The unit can be operated in low light conditions. Buttons that are functional for a particular setting will become lit.

Location and Function of Parts and Controls

For more details, see the referenced page numbers enclosed in parentheses ().

UP-991AD

Front Panel

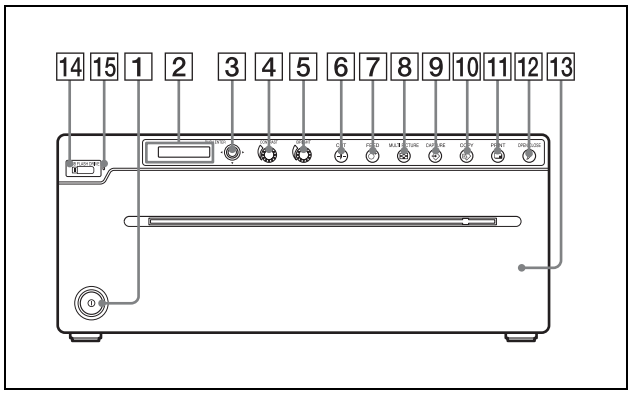

1 **⏻Power on/off switch (page 16, 26, 29, 32, 38, 38)**
Press to turn on the printer. The LCD display backlight and button backlight turn on.

Note

When the unit is turned on/off, or the main power is turned off and turned on again, turn on the unit after about five seconds.

2 **Printer window display (LCD: liquid crystal display) (page 26, 29, 32, 36)**
The back light lights in green during normal unit operation. Also, the kind of printing paper used is shown on the right of the display when the paper door opens or closes.
For detailed information on the paper, see "Loading Paper in the Unit" on page 16 and "Paper" on page 39.
If an error occurs, a corresponding alarm message is displayed.
During menu operations, menu items and settings are displayed.

3 **Menu lever (page 21, 26, 38)**
Navigate menus by tilting up, down, left or right. Also, by pressing the center of the lever, you can change the standby status to menu mode, or select menu setting items.

4 **CONTRAST (contrast) dial (page 32)**
Adjusts the contrast of printouts.

5 **BRIGHT (brightness) dial (page 32)**
Adjusts the brightness of the printouts.

6 **CUT button (page 17, 29)**
Press to cut the paper at the end of a print job using the internal paper cutter.
While printing, press to cancel the print job.

7 **FEED button (page 17, 29, 29)**
Hold down to feed paper. While printing, press to cancel the print job.

8 **MULTI PICTURE (multi-picture) button (page 30)**
Toggles between the multi-picture mode and single-picture mode.

Note

This function is available only when printing a video image.

9 **CAPTURE button (page 30, 35)**
In the multi-picture mode, press to store the print image in the memory of the unit.
When "STR:CAPT" is selected in the "STR.KEY" menu, image data captured from the video signals is stored in the USB Flash Drive.

Note

This function is available only when printing a video image.

10 **COPY button (page 30, 32)**
Press to print a copy of the last printed image. Prints only one paper regardless of the paper number set in the "QTY" menu. This function is not available in the multi-picture mode.

11 **PRINT button (page 29, 35)**
In the multi-picture mode, images stored in the memory of the unit (by the CAPTURE button) are printed sequentially on a single paper.
In the single-picture mode, press to print the image displayed on the monitor. When you press the PRINT button, the displayed image is stored in the memory of the unit and printed.
When "STR:PRNT" is selected in the "STR.KEY" menu, the image is stored in a USB Flash Drive after printing

Note

This function is available only when printing a video image.

12 **OPEN/CLOSE button (page 16, 29, 38)**
Press to open or close the paper door. While printing, press to cancel the print job.

13 **Paper door**
Open to install or replace printing paper, and to clean the thermal head and platen roller. Use the OPEN/CLOSE button to open or close the paper door.

14 **USB Flash Drive terminal**
Connect a USB Flash Drive to this terminal.

15 **USB Flash Drive access lamp**
Displays USB Flash Drive access status, or verifies any non-compatible USB devices.

Rear Panel

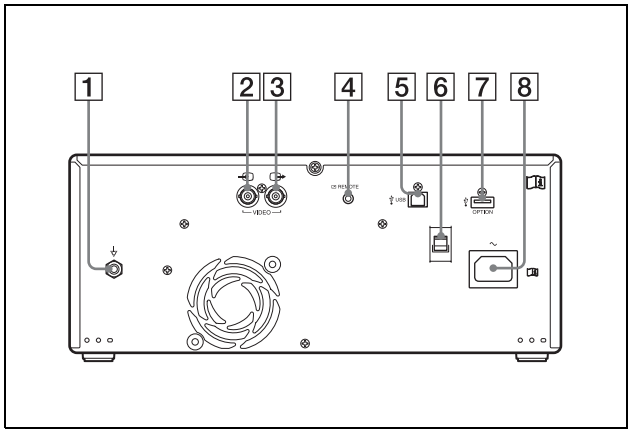

1 **Equipotential terminal**
Used to connect to the equipotential plug to bring the various parts of a system to the same potential. Refer to “Important safeguards and notices for use in the medical environments” on page 3.

2 **VIDEO IN (input) connector (BNC type)**
Connect to the video output connector of video equipment.

3 **VIDEO OUT (output) connector (BNC type)**
Connect to the video input connector of a monitor, etc.
Outputs the video signal which is input from the VIDEO IN terminal (Automatic termination is provided).

4 **REMOTE connector (page 18, 31)**
Connects the Remote commander RM-91 or Foot switch FS-24 (separately sold) for controlling print operation from a distance.

5 **USB connector (4-pin connector)**
Use the USB cable to connect a computer with a USB (USB 2.0 compliant) interface to this connector.

6 **USB Cable Clamper**
Holds and secures the USB cable connected to the USB connector.

7 **OPTION terminal**
Used for supplying power to optional accessories.

WARNING

Using this unit for medical purposes
This connector is not isolated.
Do not connect any device other than a UPA-WU10 Wireless Print System powered exclusively by the electric supply from the unit.
When a device that uses an alternating current is connected, current leakage may result in an electric shock to the patient or operator.

8 **AC IN connector**
Use the appropriate power cord for your local power supply (not supplied).

UP-971AD

Front Panel

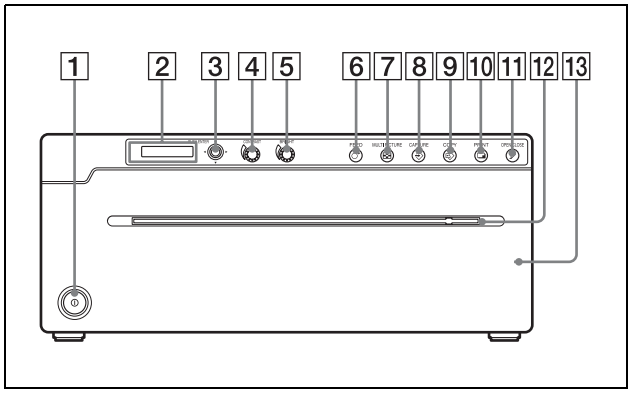

1 **⏻Power on/off switch (page 16, 26, 29, 32, 38, 38)**
Press to turn on the printer. The LCD display backlight and backlight of the button are lit when the printer is on.

Note

When the unit is turned on/off, or the main power is turned off and turned on again, turn on the unit after about five seconds.

2 **Printer window display (LCD: liquid crystal display) (page 26, 29, 32, 36)**
The backlight lights in green during normal unit operation. The printing paper type used is shown on the right of the display when the paper door opens or closes.
For detailed information on the paper, see "Loading Paper in the Unit" on page 16 and "Paper" on page 39.
If an error occurs, a corresponding alarm message is displayed.
During menu operations, menu items and settings are displayed.

3 **Menu lever (page 21, 26, 38)**
Navigate menus by tilting up, down, left or right. Also, by pressing the center of the lever, you can change the standby status to menu mode, or select the menu setting items.

4 **CONTRAST (contrast) dial (page 32)**
Adjusts the contrast of printouts.

5 **BRIGHT (brightness) dial (page 32)**
Adjusts the brightness of printouts.

6 **FEED button (page 17, 25, 29)**
Hold down to feed paper. While printing, press to cancel the print job.

7 **MULTI PICTURE (multi-picture) button (page 30)**
Toggles between the multi-picture mode and single-picture mode.

8 **CAPTURE button (page 30, 35)**
In the multi-picture mode, press to store a print image in the memory of the unit.

Note

This function is available only when printing a video image.

9 **COPY button (page 30, 32)**
Press to print a copy of the last printed image. Prints only one paper regardless of the paper number set in the "QTY" menu. This function is not available in the multi-picture mode.

10 **PRINT button (page 29, 35)**
In the multi-picture mode, images stored in the memory of the unit (by the CAPTURE button) are printed sequentially on a single paper.
In the single-picture mode, press to print the image displayed on the monitor. When you press the PRINT button, the displayed image is stored in the memory of the unit and printed.

Note

This function is available only when printing a video image.

11 **OPEN/CLOSE button (page 16, 29, 38)**
Press to open or close the paper door. While printing, press to cancel the print job.

12 **Paper Cutter**
Cut the paper as each image is printed.

13 **Paper door**
Open to install or replace printing paper, and to clean the thermal head and platen roller. Use the OPEN/CLOSE button to open or close the paper door.

Rear Panel

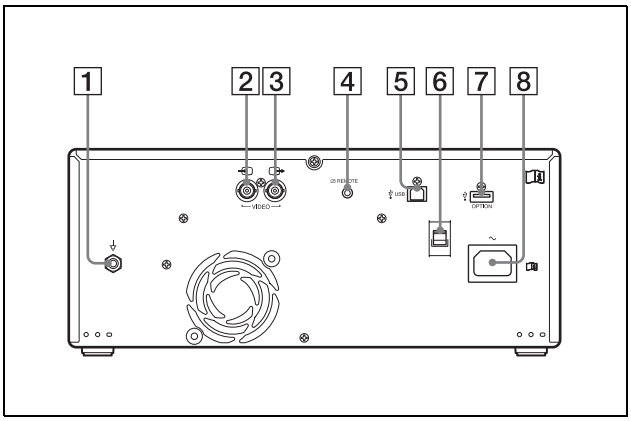

1 **Equipotential terminal**
Used to connect to the equipotential plug to bring the various parts of a system to the same potential. See "Important safeguards and notices for use in the medical environments" on page 3.

2 **VIDEO IN (input) connector (BNC type)**
Connect to the video output connector of video equipment.

3 **VIDEO OUT (output) connector (BNC type)**
Connect to the video input connector of a monitor, etc.
Outputs the video signal which is input from the VIDEO IN terminal (Automatic termination is provided).

4 **REMOTE connector (page 18)**
Connects the Remote commander RM-91 or Foot switch FS-24 (separately sold) for controlling print operation from a distance.

5 **USB connector (4-pin connector)**

Use the USB cable to connect a PC with a USB (USB 2.0 compliant) interface to this connector.

6 **USB Cable Clamper**
Holds and secures the USB cable connected to the USB connector.

7 **OPTION terminal**
Used for supplying power to optional accessories.



WARNING

Using this unit for medical purposes

This connector is not isolated.
Do not connect any device other than a UPA-WU10 Wireless Print System powered exclusively by the electric supply from the unit.
When a device that uses an alternating current is connected, current leakage may result in an electric shock to the patient or operator.

8 **AC IN connector**
Use the appropriate power cord for your local power supply (not supplied).
Refer to “Warning on power connections” on page 8 and “Warning on power connections for medical use” on page 8.

Loading Paper in the Unit

UP-971AD only

When loading paper in the unit, be sure to note the caution graphic symbols on the unit.

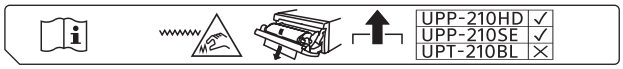



Caution

Paper cutter is mounted in the unit. When loading paper, be careful not to touch the paper cutter. Touching the paper cutter may cause injury.

Caution

Do not touch any unit circuitry and the patient at the same time.
If the unit malfunctions, it may generate voltage that could be harmful to the patient.

Notes

- Do not touch the print surface of thermal printing paper when loading it. Fingerprints, perspiration and creases that may result will lower the print quality.
- Use only UPP-210 series printing paper (page 39).
- If you use the UPP-210 series, set the menu according to the paper (page 39).

1 Press the ⏻ power on/off switch to turn the unit on.

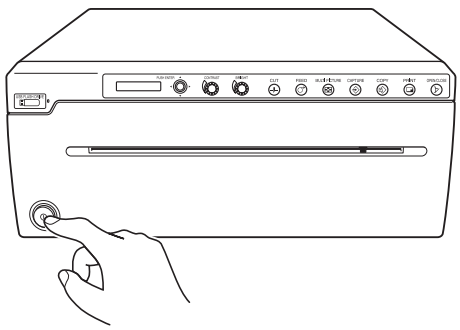

Notes

- The LCD display backlight lights in amber and shows the message “EMPTY” when no printing paper is loaded.
- The LCD display backlight lights in amber and shows the message “DOOR” when the paper door is open.

2 Press the OPEN/CLOSE button to open the paper door.

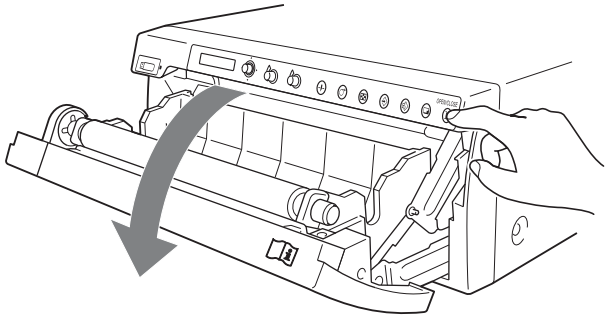

3 Place the printing paper roll on the tray.

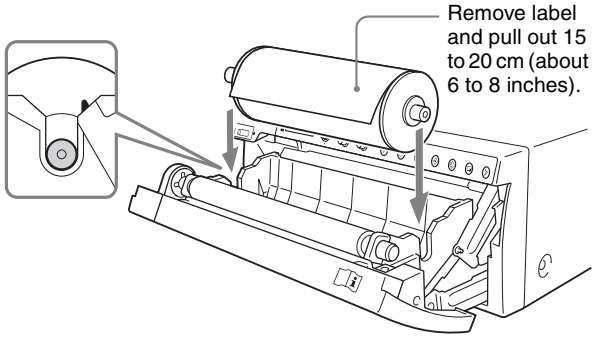

Load the paper in the orientation shown in the diagram. Printing is not possible if the paper is reversed.

4 Insert the paper into the groove of the paper tray and pull it out through the paper exit.

Note

Place the paper near the center of the groove of the paper tray (inside of the guide). Note that paper jams may occur if the paper is placed at the edge of the groove of the paper tray.

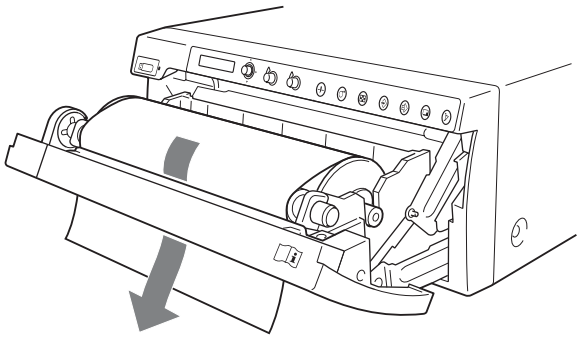

Note

Pull out the printing paper to remove any slack and possible creases.

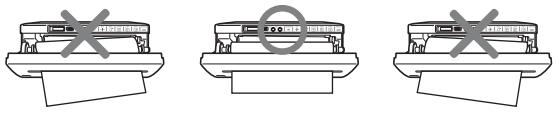

5 Press the OPEN/CLOSE button to close the paper door.
You can also push the paper door to close it.

6 Remove the paper leading edge.

UP-991AD

After loading paper, press the FEED button to feed out 15 to 20 cm (6 to 8 inches) of paper and press the CUT button to remove it.

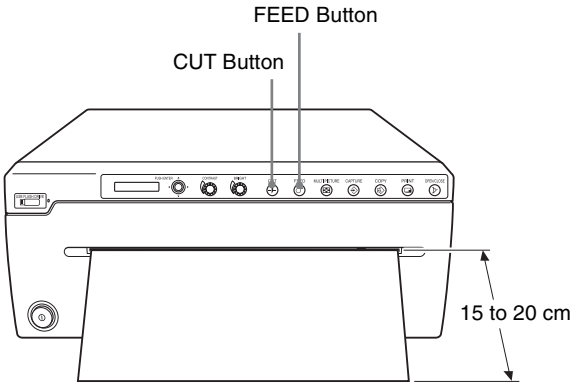

UP-971AD

After loading paper, press the FEED button to feed out 15 to 20 cm (6 to 8 inches) of paper. Then use the paper cutter to remove it.

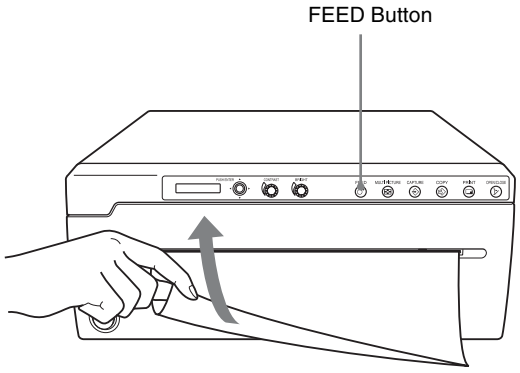

Connections

You can connect this unit to video devices and computers. When connecting, see the operating instructions of the connecting devices.

WARNING

Using this unit for medical purposes

The connectors on this unit are not isolated.
Do not connect any device other than one which conforms to IEC 60601-1 standards.
When an information technology device or AV device that uses an alternating current is connected, current leakage may result in an electric shock to the patient or operator.
If use of such a device is unavoidable, isolate its power supply by connecting an isolation transformer, or by connecting an isolator between the connecting cables.
After implementing these measures, confirm that the reduced risk now conforms to IEC 60601-1 standards.

Connecting to video devices

Notes

- Turn off the power of each device before making any connections.
- Connect the AC power cord last.

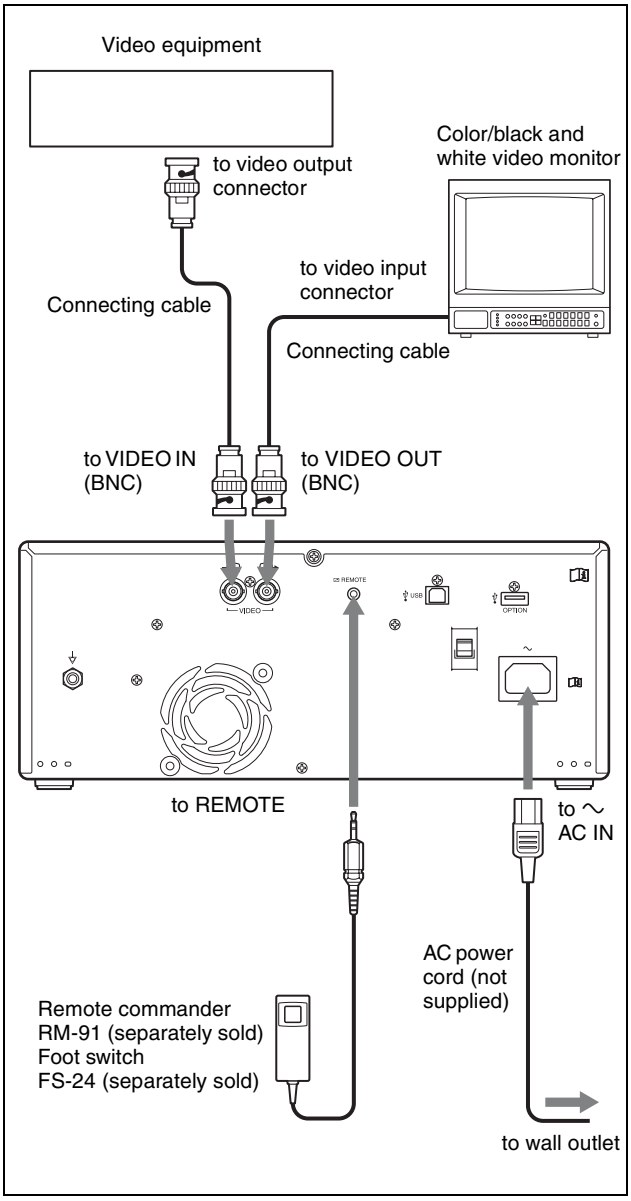

Connecting to a computer

Notes

- Before connecting the unit to a computer, turn off the unit, computer, monitor, and all peripheral devices connected to the computer.
- Before connecting the unit to the computer, disconnect the power cord from the unit. Connect the power cord to the unit only after connecting the unit and the computer.
- Follow the connection procedures described in the computer manual.
- Make sure that the cables are connected securely at both ends.
- The unit drive software provided with the unit is not suitable for using the unit connected to a network.
- Printer operation is not guaranteed when connecting to the computer using the USB cable via a hub.
- Two or more units cannot be connected to a single computer.

Connecting to the USB Connector

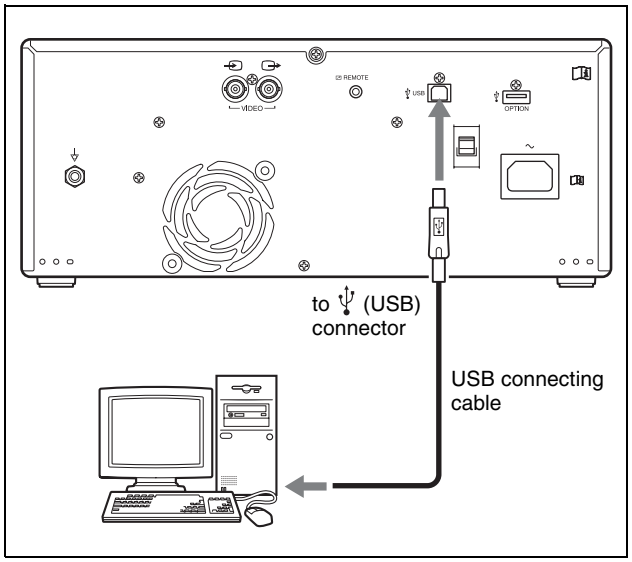

Install the printer driver to the computer

When you use Windows XP/Windows Vista:
After connecting this unit to the computer, turn on this unit. For installing, refer to the Install Guide of the supplied CD-ROM, and the Readme file.

When you use Windows 7/8/10:
Before connecting this unit to the computer, install the supplied printer driver to the computer. For installing, refer to the Install Guide of the supplied CD-ROM, and the Readme file.

Note

When this unit is turned on, do not set a connected computer to standby (suspended) or pause mode, as it may cause a malfunction.

Adjustments and Settings Using the Menu

You can carry out adjustments and settings to meet your requirements. Those settings and adjustments are retained even if the unit is turned off.
You can set up the unit according to its intended purpose, connected equipment or your individual preferences.
You can store up to three user settings.

Menu structure and layer

The contents displayed on the LCD change in sequence as you turn the menu lever, as shown in the following menu flow chart, and you can make the settings for each menu item.
Menus have a layer structure. Turn the menu lever to the right to go to the lower layer, or to the left to return to the upper layer.
On the LCD, "-" appears at the beginning of each menu item name in the lower layer.

UP-991AD Menu Outline

READY

- HISTORY
- PRT.HELP
  - LIST
  - HELP.1
  - HELP.2
  - HELP.3
  - HELP.4
  - HELP.5
- ADJUST
  - BRIGHT
  - CONTRA
  - GAMMA
  - SHARP
  - TONE
- VIDEO
  - ASPECT
  - AUT.PRT
  - COLOR
  - FIELD
  - INTRPT
  - N.MULTI
  - SCALE
  - SIDE
  - STR.KEY
  - PRT.POS
  - START.H
  - START.V
  - END.H
  - END.V
- DIGITAL
  - DRIVER
  - RESIZE
- PRT.MENU
- PREF.
  - BACWRD
  - BLANK
  - BORDER
  - INFO
  - INVERT
  - MIRROR
  - QTY
- CLEAN.TH
- CONFIG.
  - AUT.CUT
  - AUT.LCK
  - BEEP
  - CLOCK
  - PP.TYPE
  - RESET
  - LOAD
  - SAVE
- SERIAL.N

UP-971AD Menu Outline

READY

- HISTORY
- PRT.HELP
  - LIST
  - HELP.1
  - HELP.2
  - HELP.3
- ADJUST
  - BRIGHT
  - CONTRA
  - GAMMA
  - SHARP
  - TONE
- VIDEO
  - ASPECT
  - AUT.PRT
  - COLOR
  - FIELD
  - INTRPT
  - N.MULTI
  - SCALE
  - SIDE
  - PRT.POS
  - START.H
  - START.V
  - END.H
  - END.V
- DIGITAL
  - DRIVER
  - RESIZE
- PRT.MENU
- PREF.
  - BACWRD
  - BORDER
  - INFO
  - INVERT
  - MIRROR
  - QTY
- CLEAN.TH
- CONFIG.
  - AUT.LCK
  - BEEP
  - FEED
  - PP.TYPE
  - RESET
  - LOAD
  - SAVE
- SERIAL.N

Menu List

The following list explains the functions of each menu item. Factory settings are surrounded by [ ].

1st layer	Explanation	2nd layer	Explanation
HISTORY	Displays the operation history of the most recently used menus, up to a maximum of five menus. "NO ITEM" is displayed in the initial status.		
PRT.HELP	Prints an explanation of the operating methods. (English only)	LIST	Prints a list of explanations about various operating methods. (in English)
		HELP1	An explanation about "Printing two, four or six images on one sheet."
		HELP2	An explanation about "Contrast and Brightness Control."
		HELP3	An explanation about "Visual Adjustment of Brightness, Contrast, Sharpness, Tone."
		HELP4 UP-991AD only	An explanation about "Printing to film."
		HELP5 UP-991AD only	An explanation about "Storing Image Data on a USB Flash Drive."
ADJUST	Menu for picture adjustment	BRIGHT	Adjusts the printout brightness. The adjustment range is - 64 to [0], [0] to + 64. When the setting items are displayed on the LCD (PRINT button flashes), press the PRINT button to print nine pictures at varying levels of brightness.
		CONTRA	Adjusts the printing contrast. The adjustment range is - 64 to [0], [0] to + 64. When the setting items are displayed on the LCD (PRINT button flashes), press the PRINT button to print nine pictures at varying levels of contrast.
		GAMMA	Switches the gamma. GAMA3: Hard GAMA2: Soft [GAMA1: Standard]
		SHARP	Sharpens outlines in pictures. You can adjust the sharpness of outlines. The adjustment range is [0] to 14. The larger the number, the sharper the outlines. When the setting items are displayed on the LCD (PRINT button flashes), press the PRINT button to print eight pictures at varying levels of sharpness.
		TONE	Adjusts the density of neutral tints. The adjustment range is - 32 to [0], [0] to + 32. When the setting items are displayed on the LCD (PRINT button flashes), press the PRINT button to print nine pictures at varying levels of tone.

1st layer	Explanation	2nd layer	Explanation
VIDEO	Menu for video images	ASPECT [a]	Switches the aspect ratio. ASPT:1:1: Prints pictures with 1:1 aspect ratio. [ASPT:4:3]: Normally set this status.
		AUT.PRT	You can switch between automatic and manual printing in multi-picture mode. AUTP:ON: Prints pictures without pressing the PRINT button. Printing starts automatically as soon as the number of images specified in the multi picture mode is captured. [AUTP:OFF]: Prints by pressing the PRINT button.
		COLOR	Switches according to the input signal. COLR:ON: For printing images from color video signals. [COLR:OFF]: For printing images from black and white video signals. Also, switches the file format (color/black and white) for saving to USB Flash Drive. To save in color, select "CAPT" in "STR.KEY." (UP-991AD only)
		FIELD	Switches the memory mode. FIED:ON: When a picture containing rapid motion results in a doubly-blurred print, select this. [FIED:OFF]: Normally select this.
		INTRPT	Switches the operation when you cancel printing. Single-picture mode: INTR:ON: If you press the PRINT button again to cancel a print operation and want to print a screenshot at the moment the PRINT button is pressed, select this. INTR:OFF: Even when you press the PRINT button again during a print operation, printing continues. If you want to print a screenshot at the moment the PRINT button is pressed after the print operation finishes, select this. Multi picture mode: INTR:ON: If you press the CAPTURE button again to cancel a print operation and want to print a screenshot at the moment the CAPTURE button is pressed, select this. The screenshot is printed at the position that the number flashing in the LCD display indicates. INTR:OFF: Even when you press the CAPTURE button again during a print operation, printing continues.
		N.MULTI	Specify the number of printed pictures on a paper. MULTI:6: Six pictures on a paper (divided into six sections) MULTI:4: Four pictures on a paper (divided into four sections) [MULTI:2]: Two pictures on a paper (divided into two sections)
		SCALE	Set the scale of enlargement for printing pictures. The modification range is [1.0] to 2.0, in 0.1 increments.
		SIDE [b]	Switches the print direction. SIDE:ON: Prints pictures sideways. [SIDE:OFF]: Prints pictures in the way they appear on the monitor screen.
		STR.KEY UP-991AD only	Sets the mode by which to save picture data to a USB Flash Drive. [STR:PRNT]: Saves pictures to USB Flash Drive by pressing the PRINT button. The picture will be saved after printing. STR:CAPT: Saves pictures to USB Flash Drive by pressing the CAPTURE button.
		PRT.POS	Prints video images with coordinate lines for adjusting the printing area.
		START.H	Specifies the horizontal starting point of the printing range. S.H: 0~[6]~719 (NTSC) 0~[8]~719 (PAL)
		START.V	Specifies the vertical starting point of the printing range. S.V: 0~[22]~503 (NTSC) 0~[28]~603 (PAL)
		END.H	Specifies the horizontal ending point of the printing range. E.H: 0~[719] (NTSC) 0~[707]~719 (PAL)
		END.V	Specifies the vertical ending point of the printing range. E.V: 0~[500]~503 (NTSC) 0~[598]~603 (PAL)

1st layer	Explanation	2nd layer	Explanation
DIGITAL	Menu for digital images	DRIVER	Switches the printer driver. [DRV:991]: For UP-991AD and UP-971AD. (UP-991AD only) [DRV:971]: For UP-991AD and UP-971AD. (UP-971AD only) DRV:990: For UP-990AD, a previous model. However, when using the UPA-WU10 Wireless Print System, select DRV:991. DRV:970: For UP-970AD, a previous model. However, when using the UPA-WU10 Wireless Print System, select DRV:971.
		RESIZE	You can select printing with or without enlargement. [RSIZ:OFF]: Prints the original size. RSIZ:ON: Prints with enlargement to the paper size specified by the printer driver.
PRT.MENU	Prints a list of the current setting items. MENU:OK : Prints a picture by pressing the menu lever.		
PREF.	Menu for setting the printout method	BACWRD [c)]	Switches the printing direction. [BAC:AUTO]: Prints pictures from the bottom. BAC:ON: Prints pictures from the top. BAC:OFF: Prints pictures from the bottom.
		BLANK UP-991AD only	Sets the upper and lower margin widths of the printing paper. You can adjust the margin from [0] to 15. Increasing one value adds 5 mm to each upper and lower margin. The maximum width of each upper and lower margin is 75 mm.
		BORDER	Selects whether to render the frame in black or white. [BD:AUTO]: Renders in white. BD:BLACK: Renders in black. BD:WHITE: Renders in white.
		INFO	Prints information under the picture. [INFO:OFF]: No information added. INFO:ADJ: Adds the picture adjustment value. INFO:CLK: Adds date and time information. (UP-991AD only) INFO:STR: Adds the path and file name of saved pictures to USB Flash Drive. (UP-991AD only)
		INVERT	Inverts black and white. INV:NEG: Prints with black and white reversed. [INV:POS]: Normal (without reversing black and white)
		MIRROR	Prints the picture with left and right reversed. MIRR:ON: With right and left reversed. [MIRR:OFF]: Normal (without reversing right and left)
		QTY	Sets the number of prints. QTY:[1]-10: Sets the number of prints for an image.
CLEAN.TH	Clean the printer thermal head. CLEAN OK: Start cleaning by pressing the menu lever.		

1st layer	Explanation	2nd layer	Explanation
CONFIG.	Settings for operations	AUT.CUT UP-991AD only	Switches whether the printer automatically cuts the printed paper after printing or not. ACUT:OFF: Cuts the paper with the cut button. [ACUT:ON]: Cuts the paper automatically.
		AUT.LCK	Switches whether to lock the BRIGHTNESS and CONTRAST dials automatically or not. ALCK:ON: Locks automatically. To release, hold down the menu lever for three seconds while in STANDBY status. If there is no operation for more than 10 seconds during the unlocked status, the dials will be locked. ALCK: OFF : Does not lock automatically. Holding down the menu lever for three seconds switches locking/unlocking of the dial.
		BEEP	Switches the beep sound on or off. The alarm buzzer always sounds, regardless of the setting. BEEP:OFF: No beep sound. [BEEP:ON]: Beep sound.
		CLOCK UP-991AD only	Sets the time. Set the year: Change items turning the menu lever up or down, and adjust them while "Y: XXXX" is displayed, then press the menu lever to set. You can set the month, hour, minute second in the same way as above. To reset, turn the menu lever to the left. The initial setting is Standard World Time.
		FEED UP-971AD only	Switches the paper sending length after printing. [FEED:ON]: Sends the paper with margin after printing. FEED:OFF: Reduces the paper sending length or prints a number of images without paper cutting. Since the margin for a paper is small, you can make more prints from one paper set. Cut the paper after pressing the FEED button.
		PP.TYPE	Selects the type of paper media. [P.TYPE:HD]: For UPP-210HD P.TYPE:SE: For UPP-210SE
		RESET	Returns to the factory default setting. (Initializing) RESET:OK: Returns to the factory default setting.
		LOAD	Calls up a registered menu setting. LOAD:3: Calls up the menu setting registered in “SAVE: 3”. LOAD:2: Calls up the menu setting registered in “SAVE: 2”. [LOAD:1]: Calls up the menu setting registered in “SAVE: 1”.
		SAVE	Registers three types of menu setting. SAVE:3: Register as number 3. SAVE:2: Register as number 2. [SAVE:1]: Register as number 1.
SERIAL.N	Displays the product serial number.		

a) The aspect ratio is as follows.

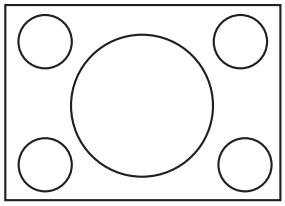

When ASPT:4:3 is selected

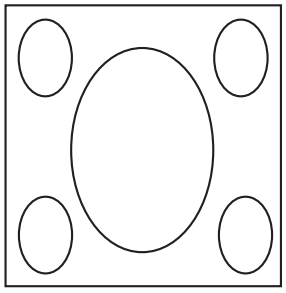

When ASPT:1:1 is selected

b) The print direction of images is as follows.

Image displayed on the monitor

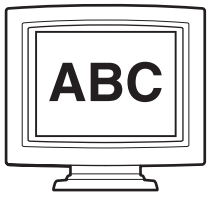

Printouts

When SIDE:OFF is selected.

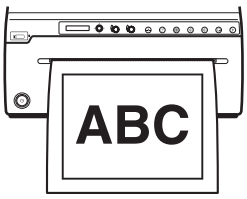

When SIDE:ON is selected

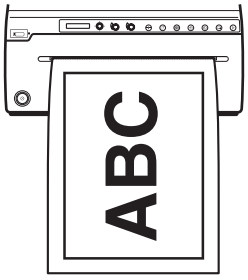

c) The printing direction determined by the setting is as follows.



When BAC:OFF is selected



When BAC:ON is selected

Basic Menu Operations

This section describes the basic menu operations common to each menu. As an example, the following procedure describes how to set the printing direction.

1 Press the ⏻ power on/off switch to turn the unit on. The back light on the LCD lights in orange, and then changes to green.

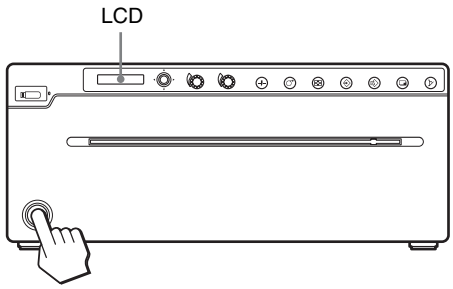

2 Confirm that “READY” is displayed on the LCD, and press the menu lever.

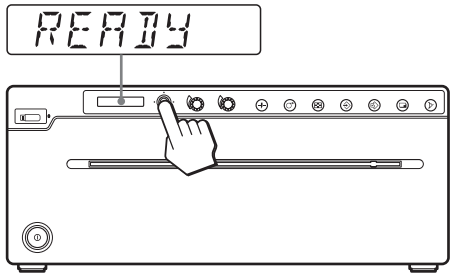

The unit enters the menu mode.
The top item of the “HISTORY” menu is displayed.

3 Display “VIDEO” by turning the menu lever up or down.

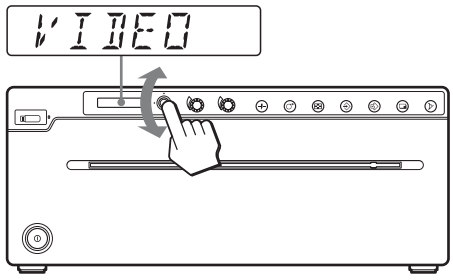

4 Display “ASPECT” by turning the menu lever to the right once. Then display “SIDE” by turning the menu lever down several times.

5 Display “SIDE:OFF” by turning the menu lever to the right once.

6 Press the menu lever.

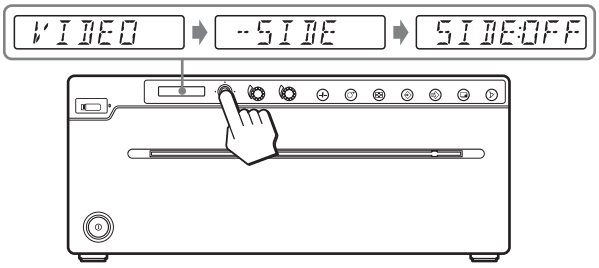

The unit enters the mode in which you can select the printing direction.
"SIDE:OFF," which is the factory setting, is displayed on the LCD. "SIDE:OFF" is the currently selected setting.
In this menu operation, you will change the setting to "SIDE:ON."

7 Display "SIDE : ON" by turning the menu lever up or down, then press the menu lever.

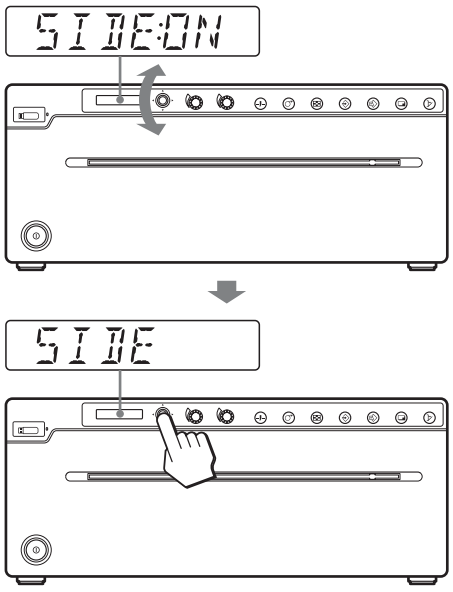

"SIDE:ON" is registered as the printing direction.
"-SIDE" reappears on the LCD.

Note

If about 20 seconds elapse without making any menu lever operation after you have displayed the menu item or setting, the display returns to "READY" on the LCD and the unit exits the menu mode. In such a case, the setting of "-SIDE" will not change.

To cancel the setting

1 Return the LCD display to "SIDE" by turning the menu lever to the left.

To continue menu operations

Make settings by repeating steps 3 to 7.

To end menu operation

1 After step 7, exit the menu mode by turning the menu lever twice to the left.

Registering Menu Settings

You can store up to three sets of menu settings, which you can load at any time.
The unit retains these settings even if you turn off the power.

Note

When you use the unit for the first time after you purchase it, factory settings are registered in all three of the stored selections.

Registering new settings

1 Make all of the required settings.

2 Display "CONFIG" by turning the menu lever up or down.

3 Display "-SAVE" by turning the menu lever to the right and up or down, and then press the menu lever.

4 By turning the menu lever up or down, display the number to which you want to register the settings, and then press the menu lever again.
The settings made in step 1 are registered in the number displayed in this step.

Loading the desired settings

You can load the desired settings.

1 Confirm that "READY" is displayed on the LCD, and press the menu lever.

2 Display "CONFIG" by turning the menu lever up or down.

3 Display "-LOAD" by turning the menu lever to the right and up or down, then press the menu lever again.

4 By turning the menu lever up or down, display the number in which the settings you want to load are registered, then press the menu lever again.
The settings registered in the number displayed in this step are loaded.

When you change the loaded settings

The unit operates according to the changed settings. In this case, the unit operates at the currently loaded settings, until you load another set of settings, even if you turn off the unit. Loading another set of settings will clear the previously loaded settings.

To retain previously loaded settings

Example: Settings registered as "SA:1" are loaded and settings are changed. To retain the original settings of "SA:1" and to register the new settings as "SA:2," proceed as follows.

1. Load the settings of "LOAD:1" following the procedure for loading the desired settings.
2. Change the loaded settings as required.
3. Select "SAVE:2" following the procedure for registering the settings.
4. Press the menu lever.
   The settings, changed in step 2, are registered as "SA:2" (No.2).

Call up the last-used menus

You can store the five most recently used menus in HISTORY.
This feature is convenient for calling up frequently used menus.

1. Confirm that "READY" is displayed on the LCD, then press the menu lever.
2. Confirm that "HISTORY" is displayed, then turn the menu lever to the right.
3. The latest-used menu is displayed.
   Display a desired menu by turning the menu lever up or down.
4. Press the menu lever and change settings if desired.
   "NO ITEM" is displayed if no menu has been used, i.e., in the initial status.

Printing explanations of operating methods

You can print out explanations of easy operating methods.

1. Confirm that "READY" is displayed on the LCD, then press the menu lever.
2. Display "PRT.HELP" by turning the menu lever up or down.
3. Display "LIST" by turning the menu lever to the right, then press the menu lever. A list of operating methods/explanations will be printed.
4. Display a desired menu by turning the menu lever, then press the menu lever. The explanation of the operating method is printed.
   The explanation of the operating method is in English only.

Printing the Menu List

You can make a printout of the current menu settings.

1. Confirm that "READY" is displayed on the LCD, then press the menu lever.
   HISTORY is displayed.
2. Display "PRT.MENU" by turning the menu lever up or down.
3. Display "MENU:OK" by turning the menu lever to the right once, and then press the menu lever.
   The unit starts printing the current menu settings.

Printing

Before Starting a Print Job

Always check the following points:

- Unit connected correctly? (page 18)
- Paper loaded correctly? (page 16)
- Menu settings and menu adjustments done correctly? (page 20)
- In the case of a video image, is the video source signal input?

Starting a Print Job of Video Images

You can set up the printing direction, image size, and various settings for printing, using the menu. This section describes operations after completing the various settings using the menu.

1 Press the ⏻ power on/off switch to turn the unit on. The back light on the LCD lights in orange, and then changes to green. “READY” is displayed on the LCD.

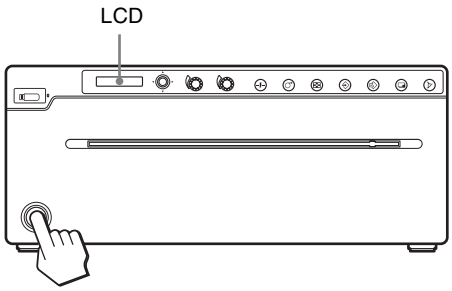

2 Start the video source.
This operation is done using the controls of the video equipment which you are using as the source.

3 Press the PRINT button when the image you want to print is on the video monitor.
The image displayed at the instant you press the button will be printed.

When a message is displayed on the LCD

If a problem occurs, the back light on the LCD will light in amber and an error message stating the problem is displayed on the LCD.

Message	Cause and remedy
EMPTY	Paper is not loaded. Load paper.
DOOR	The paper door is open. Close the paper door.

When the unit stops printing during printing

When continuously printing images of high density, such as mostly dark images, the thermal head protection circuit may shut down the unit to prevent the thermal head from overheating. In such a case, the message “COOLING” is displayed on the LCD.
Wait until the thermal head cools down and the message disappears.

To cancel a print job in progress

To cancel a print job in progress, press the OPEN/CLOSE button, FEED button or CUT button.

To feed paper

To feed paper, press the FEED button. The unit will continue to feed paper as long as you hold down the FEED button. Do not attempt to pull paper out of the unit by hand.

To cut paper (UP-971AD)

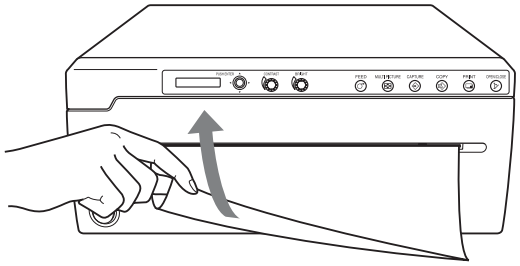

Hold the paper at a position which is 15 to 30 cm away from the paper exit, then pull it up in the direction the arrow indicates.
How the paper is cut off varies depending on positions you hold on the paper, directons in which you pull up the paper, and speeds at which you pull it up.
Cut off the paper according to the print size.

Paper currently selected

You can confirm the paper currently selected on the LCD. The type of printing paper used is displayed on the right of the display when the paper door opens or closes.

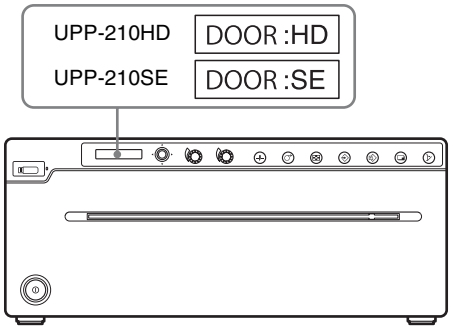

Note

If “ACUT:ON” is selected in the “AUT.CUT” menu, quickly remove the prints that have been cut. Otherwise, the cut prints may block the paper exit and cause a paper jam to occur.

If the printout image is blurred

A rapidly moving image may be blurred when printed. Should this occur, make a printout with "FIED:OFF" selected in the "VIDEO" "-FIELD" menu item.

Printing two, four or six images on one sheet

Use “N.MULTI” item of the menu to capture and print two to six different images on one sheet.

1 In the “VIDEO” “-N.MULTI” menu, display “MULTI:2” – “MULTI:6” according to the number of images you want to print on one sheet, then press the menu lever.

2 When the MULTI PICTURE button on the front panel is pressed, the LCD display switches to the multi-picture mode.
When “MULTI:2” is selected:
M 1 2 : 1 indicates that “1” flashes.

3 Press the CAPTURE button in step 3 of “Starting a Print Job of Video Images” in the section “Analog mode” (page 29).
This captures the displayed image and assigns it the flashing number.
The next available number flashes in the LCD display.
When “MULTI:2” is selected:
M 1 2 : The captured image is assigned “1” and “2” starts flashing.

4 Press the CAPTURE button again to capture the displayed image.
If the “AUT.PRT” menu is ON, printing starts automatically as soon as the number of images specified by “MULTI:(2/4/6)” is captured. If the menu is OFF, press the PRINT button to start printing.

Capturing two images (“MULTI:2 selected in “N.MULTI”)

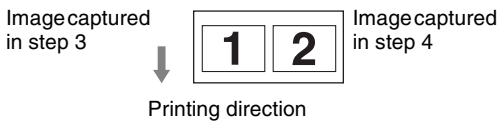

Capturing four images (“MULTI:4 selected in “N.MULTI”)

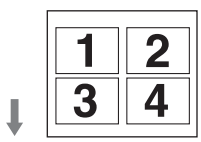

Capturing six images (“MULTI:6 selected in “N.MULTI”)

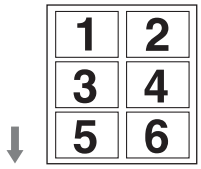

“INFO:ON” selected in “INFO” menu

In multi-picture mode, if “INFO:ON” is selected in the “INFO” menu, information about the last captured image is printed in the margin.
Example: If “N.MULTI” is set to “MULTI:6” and six images are captured, “IMAGE:6” is printed in the margin as the information for that image.

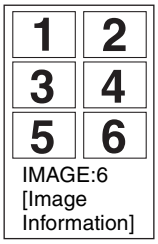

Making Copies of the Last Printout

Press the COPY button in the single-picture mode. Press the PRINT button in the multi-picture mode. The unit makes a copy of the last printout. Each press of the button prints one paper regardless of the paper numbers set in the “QTY” menu.

Note

If you press the COPY button immediately after turning the power on, the alarm buzzer will sound as nothing is stored in memory. In this case, you cannot start a copy job.

Making copies of the same image continuously

Press the COPY button in the single-picture mode, or press the PRINT button in the multi-picture mode. And press the COPY or PRINT button while copying the first printout. When you press the COPY or PRINT button once, a buzzer sounds and one printout will be made. The number of printouts accords to how many times you press the COPY or PRINT button. Each press of the button prints one paper regardless of the paper numbers set in the “QTY” menu.

To interrupt copying

To cancel a print job in progress, press the OPEN/CLOSE button, FEED button or CUT button.

To make copies in different directions

You can copy the image stored last in a different direction. Before pressing the COPY button in the

single-picture mode or the PRINT button in the multi-picture mode, select the printing direction.

To print from a remote location

If the Remote commander RM-91 is connected to the REMOTE connector on the rear panel, you can start printing at a short distance from the unit by pressing the remote switch.

Single-picture mode

When an image you want to print appears, press the remote switch. The screenshot of that instant is printed.

Multi-picture mode

When an image you want to capture appears, press the remote switch to save a screenshot of that instant in the memory of the unit.
Printing starts automatically when the number of images set in the “MULTI” menu have been captured.

Note

Even if “INTRA:ON” is selected in the "VIDEO" "-INTRPT" menu, pressing the remote switch performs the same action as pressing the PRINT button or CAPTURE button in each mode.

Selecting the printing direction

You can select the printing direction using the “SIDE” menu item.

To print in the same direction as the one displayed on the video monitor

Select “SIDE:OFF” from “SIDE.”

To print an image rotated counterclockwise

Select “SIDE:ON” from “SIDE.”

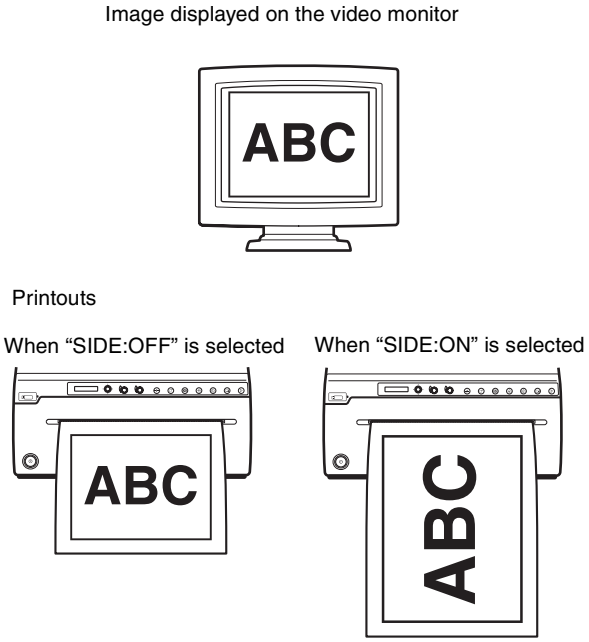

To set the range of the image to be printed

1 When the “VIDEO.” “-PRT.POS,” “P.POS:OK” menu is displayed, press the menu lever. The unit prints the video image with coordinate lines for adjusting the printing area.

2 On the printout, decide the starting point (upper left) and ending point (lower right) of the printing area, and check the coordinate values of the points.

3 Display “S.H:” in “-START.H” by operating the menu. Then enter the horizontal start point coordinate by turning the menu lever up or down, and press the menu lever.

4 Display “S.V:” in “-START.V” by operating the menu. Then enter the vertical start point coordinate by turning the menu lever up or down, and press the menu lever.

5 Display ”E.H:” in “-END.H” by operating the menu. Then enter the horizontal end point coordinate by turning the menu lever up or down, and press the menu lever.

6 Display “E.V:” in “END.V” by operating the menu. Then enter the vertical end point coordinate by turning the menu lever up or down, and press the menu lever.

7 Display “READY” by turning the menu lever several times to the left, and then press the PRINT button. Confirm that the specified area of the picture is printed.

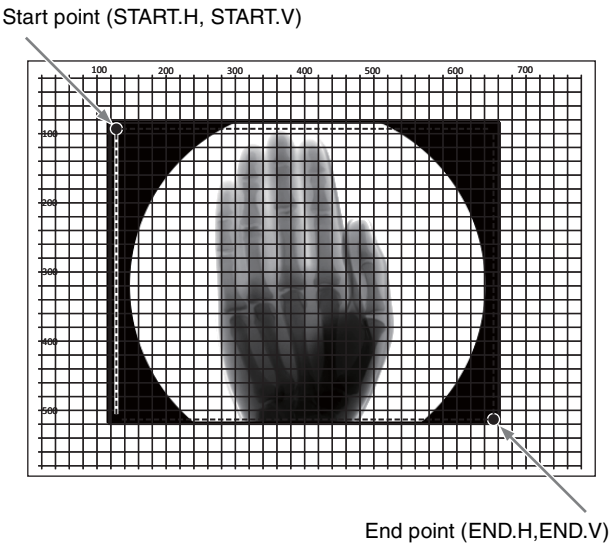

Printing a captured image with enlargement

You can set the "VIDEO" – "-SCALE" menu up to double in size.
You can print the captured image enlarged up to the printing paper size maximum. The enlargement range is up to the printing paper size.

Printing digital images from a computer

You can set the printing method using the menu. This explanation is about the operation after finishing these settings.

1 Press the ⏻ power on/off switch to turn the unit on. The back light on the LCD lights in orange, and then changes to green. "READY" is displayed on the LCD.

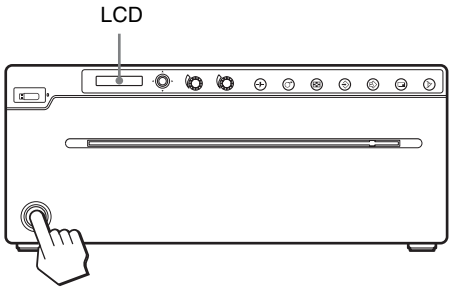

2 Operate the application software in the computer, and start a print job.

When the unit stops printing during printing

When continuously printing images with high density such as mostly dark images, the thermal head protection circuit may shut down the unit to prevent the thermal head from overheating. In such a case, the message "COOLING" is displayed on the LCD.
Wait until the thermal head cools down and the message disappears.

To cancel a print job in progress

To cancel a print job in progress, press the OPEN/CLOSE button, FEED button or CUT button.

To feed paper

To feed paper, press the FEED button. The unit will continue to feed paper as long as you hold down the FEED button. Do not attempt to pull paper out of the unit by hand.

Paper currently selected

You can confirm the paper currently selected on the LCD. The type of printing paper used is displayed on the right of the display when the paper door opens or closes.

Making Copies of the Last Printout

Press the COPY button. The unit makes a copy of the last printout. In this case, with each press of the COPY button, prints only one paper regardless of the paper number set in the "QTY" menu.

Note

If you press the COPY button immediately after turning the power on, the alarm buzzer will sound as nothing is stored in memory. You cannot start a copy job.

Making Copies of the same image continuously

Press the COPY button, then press it again while the first paper is printing. When the COPY button is pressed, a buzzer sounds, and you can copy the first printout continuously. With each press of the COPY button, prints only one paper regardless of the paper number set in the "QTY" menu.

To interrupt copying

To cancel a print job in progress, press the OPEN/CLOSE button, FEED button or CUT button.

Printing the captured image with enlargement

When "RSIZ: ON" is set in the "DIGITAL" - "-RESIZE" menu, you can print out the enlarged image up to the same size as the printing paper.

Adjusting print image quality

You can adjust print image quality using the CONTRAST and BRIGHT dials, or by menu operation. Adjusted settings are stored after the unit is turned off, and retained until further adjustment is made.

To adjust the contrast or brightness using the control dials

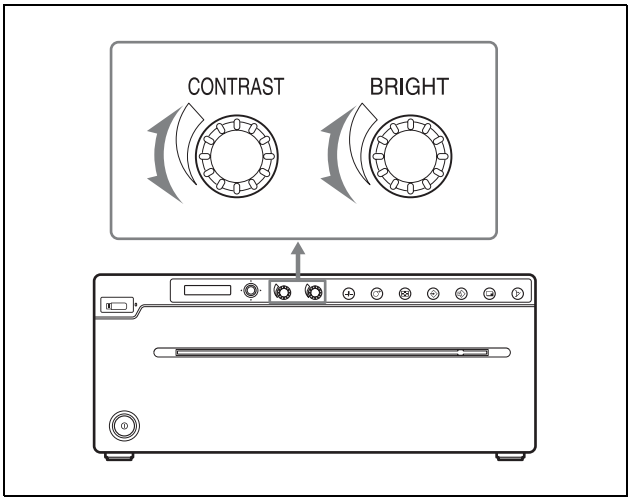

To adjust the contrast

You can adjust the contrast of printouts using the CONTRAST dial.
To make the contrast stronger: Turn the CONTRAST dial clockwise.
To make the contrast weaker: Turn the CONTRAST dial counterclockwise.

To adjust the brightness

You can adjust the brightness of printouts using the BRIGHT dial.
To make the image brighter: Turn the BRIGHT dial clockwise.
To make the image darker: Turn the BRIGHT dial counterclockwise.

To lock the brightness and contrast dials

When the menu lever is held down for about 3 seconds, "LOCK" is displayed on the LCD. In this state, you cannot change values by operating the dials.
To release the lock, hold down the menu lever for about 3 seconds again.
Even when the dials are locked, however, you can change values by using the menu.

Adjusting the picture quality using the menu

You can adjust the print image quality by the "ADJUST" menu.

To adjust the brightness

You can adjust the brightness of printouts in the "ADJUST" – "-BRIGHT" menu.
The values you specify using the menu and using the dial are synchronized.

Contents	Operation/Value
Lighten	Raise the value
Darken	Lower the value

To adjust the contrast

You can adjust the contrast of the printing image in the "ADJUST" – "-CONTRA" menu.
The values you specify using the menu and using the dial are synchronized.

Contents	Operation/Value
Stronger the contrast	Raise the value
Weaker the contrast	Lower the value

To adjust the gamma

You can change the gamma of printouts in the "ADJUST" – "-GAMMA" menu.
If an image contains a lot of black or white portions, by adjusting this setting, you can obtain clearer detail in those portions.

Contents	Operation/Value
When you print an image which has many black portions (hard tone)	GAMMA 3
When you print an image which has many white portions (soft tone)	GAMMA 2
Normal	GAMMA 1

To sharpen the outline

You can adjust the sharpness of the picture outline in the "ADJUST" – "-SHARP" menu.

Contents	Operation/Value
Sharpen the outline	Raise the value
Soften the outline	Lower the value

To adjust halftone brightness

You can adjust the halftone brightness of printouts in the "ADJUST" – "-TONE" menu.

Contents	Operation/Value
Brighten the halftone	Raise the value
Darken the halftone	Lower the value

To adjust the picture quality easily

You can select the most suitable value by printing nine images of differing quality on a single paper.
You cannot print nine different images in the gamma adjustment.

1. When you want to adjust the printing image of the video images, connect this unit to a video device. You do not need print before.
   When you want to adjust the printing image of the digital images, print the image to adjust beforehand, which is required to print nine different images.
2. Confirm the displaying "READY" on the LCD, and press the menu lever.
3. Turn the menu lever up or down to display "ADJUST."
4. Turn the menu lever to the right to display "-BRIGHT."
5. Turn the menu lever up or down to display the item which you want to adjust.

6 Turn the menu lever to the right to display the value.
Blinks the PRINT button.

7 Press the PRINT button.
Prints nine images input from the video device, or nine images of the digital image you have printed previously.
Example; When the PRINT button is pressed while "BRIGHT" is set to "0."

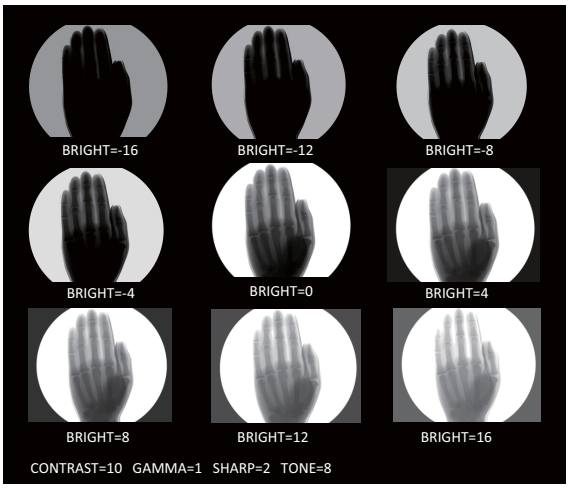

The value changes such as in the following figure. The center image is the current setting value.
The modification range has 4 increments. (In the "SHARP" menu, 2 increments.)
Displays the other setting values in the lower left margin of the printing image.

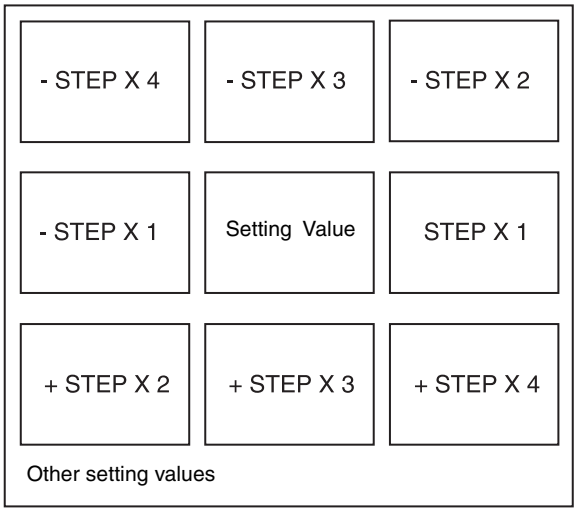

8 Select the most suitable image confirming the print result.
Turn the menu lever up or down to display the setting value.
Press the menu lever to set the value.
The setting value will be reflected in the picture from the next printing.

For further adjust the value, or other setting values, turn the menu lever once to the left, and then return to step 5.

Storing Image Data on a USB Flash Drive (UP-991AD only)

When a USB Flash Drive is inserted into the USB memory terminal on the front of the printer, on-screen image data (which was captured) is stored as bitmap (BMP) image data on the USB Flash Drive when you print the captured image data.
You can view image data stored in the USB Flash Drive via a personal computer equipped with a USB port.

WARNING

Using this unit for medical purposes

This connector is not isolated.
Do not connect any device other than a USB Flash Drive powered exclusively by the electric supply from the unit. When a device that uses an alternating current is connected, current leakage may result in an electric shock to the patient or operator.

Folder which the image is saved into

The image file will be saved into the \\SONY\UP-991AD\SN.[Serial Number of this device] folder on the USB flash drive. If the folder does not exist, it will be created.

File name of the image

Each time you print image data captured by pressing the PRINT button, the image data is stored as BMP image data, with a name assigned, in order, from UP_000001 to UP_999999. In the case of multi-picture, each image is stored as one file. Image data printed once is not stored again.
A time stamp is also added to the file.

To make printouts with the correct date

The day and time setting is necessary.
For detailed information, see “CONFIG” “-CLOCK” on page 25.

Storing Image Data on a USB Flash Drive

Note

Using a USB Flash Drive manufactured by Sony Corporation is highly recommended to guarantee the storing function.
Use USB flash drives of a size that allows for insertion into the USB flash drive terminal.
(USB Flash Drive dimensions: height of 1 cm or less, width of 2.1 cm or less, and length of 3 cm or more)

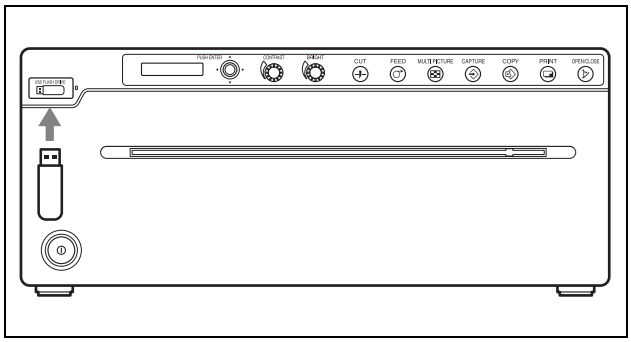

1 Connect the unit to a video device or computer (page 18)
Turn on the unit.

2 Insert the USB Flash Drive into the USB memory terminal.

3 When you want to save the video image data, set the “STR:PRNT” in the “VIDEO” - “-STR.KEY” menu.

4 Print the video image (page 29), or the digital image from a computer (page 32).
The printer starts printing.
At the same time, the image data is stored in the USB Flash Drive. While it is being written in the USB Flash Drive, the green access lamp is lit.
When writing is completed, the access lamp goes off.

To store video image data to a USB Flash Drive without printing

Set “STR:CAPT” in the “VIDEO”-“STR.KEY” menu.
Connect the unit to a video device and press the CAPTURE button while the video signal is input, and the image data is written to the USB Flash Drive.
“STORING” is displayed on the LCD.
However, you cannot store the digital image data from a computer without printing.

To store color video images to a USB Flash Drive

Set “STR:CAPT” in the “VIDEO”-“STR.KEY” menu, and “COLR:ON” in the “VIDEO”-“-COLOR” menu. Connect the unit to a video device and press the CAPTURE button while the video signal is input, and the color image data can be stored into the USB Flash Drive.
“STORING” is displayed on the LCD.
However, for color video images, you cannot print them while you can store them in a USB Flash Drive.

To remove the USB Flash Drive

While the green access lamp is lit in green, data writing is in progress. If you remove the USB Flash Drive at this time, the data will not be stored correctly. Please be careful.

If NO.SPACE is displayed on the LCD

No more data can be written on the USB Flash Drive because it has no remaining space available.
In this case, delete unnecessary files from the USB Flash Drive using a personal computer, or use a new USB Flash Drive.

USB Flash Drive access lamp status indications

Colors and lighting	Status
Lit in green	Data writing to a USB Flash Drive is in progress.
Flashes quickly in orange	A USB device other than USB Flash Drive is inserted. Use a Sony USB Flash Drive.
Flashes in orange	A USB hub is inserted. You cannot use the USB hub.

Note

- The USB Flash Drive terminal of this unit is for a USB flash drive only. Do not connect a USB device with its own power supply, such as a hard disk. Otherwise it may cause malfunction.
- Do not connect a USB device requiring over 500 mA, even temporarily, even if its power supply is from the USB Flash Drive terminal.
- You can store image data to the USB Flash Drive only in bitmap (BMP) format.
- Picture data saved in USB Flash Drive cannot be read and printed again.
- The unit can write image data to a USB Flash Drive. However, you cannot read or delete the data. To read or delete data again, use a computer which has a USB port.

Caution when using the USB memory terminal

- Compatible with USB mass storage class on the USB Flash Drive. (Operation of all USB Flash Drive types is not guaranteed.)
- Connecting a USB Flash Drive to the USB memory terminal via USB hub is not guaranteed.
- Compatible with Hi-Speed USB (USB 2.0 compatible).
- Compatible with FAT32 file system.
- If a USB Flash Drive has a lock feature, release the lock before use.
- You cannot use a USB Flash Drive which has more than 2 drives.
- Do not use a USB Flash Drive in which a password is set.
- It does not correspond to the USB flash drive with a special feature such as encryption.

Precautions

On Safety

- Check the operating voltage before operation. Operate the unit only with a power source specified in "Specifications."
- Stop operation immediately if any liquid or solid object falls into the cabinet. Unplug the unit and have it checked by qualified personnel.
- Unplug the unit from the wall outlet if you will not be using it for a long time. Disconnect the power cord by grasping the plug. Never pull the cord itself.
- Do not disassemble the cabinet. Refer servicing to qualified personnel only.
- Connect the power plug of the unit to a wall outlet with a protective earth terminal. The safety earth should be properly established.

On the Printer Carriage

Do not carry or move the unit when the paper roll is placed in the unit. Doing so may cause a malfunction.

On Installation

- Place the unit on a level and stable surface. If you use the unit with placed on an uneven surface, malfunction of the unit is likely to occur.
- Do not install the unit near heat sources. Avoid locations near radiators or air ducts, or places subject to direct sunlight or excessive dust, humidity, mechanical shock or vibration.
- Provide adequate air circulation to prevent heat build-up. Do not place the unit on surfaces such as rugs, blankets, etc., or near materials such as curtains and draperies.

Caution

To prevent internal heat built-up, maintain sufficient space around the printer for air to circulate through the ventilation holes (intake) on the left and right sides and the ventilation holes (exhaust) on the rear of the cabinet (at least 10 cm (4 in.)).

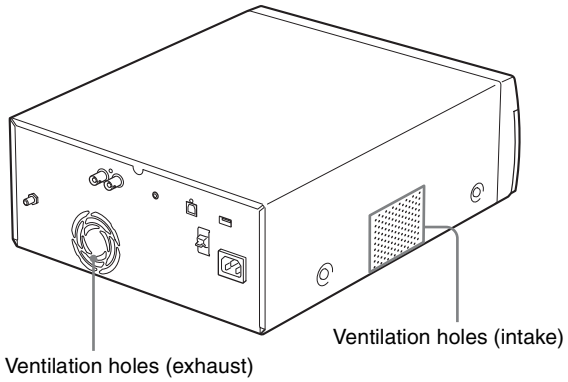

- If the unit is subjected to wide and sudden changes in temperature, such as when it is moved from a cold room to a warm room or when it is left in a room with a heater that tends to produce large amounts of moisture, condensation may form inside the unit. In such cases the unit will probably not work properly, and may even develop a fault if you persist in using it. If moisture or condensation forms, turn off the power and allow the unit to stand for at least one hour.

About the battery (UP-991AD only)

This unit has a battery for the clock operation inside. The battery is a consumable part that will need periodic replacement.
When operating at room temperature, the normal replacement cycle will be about 5 years. However, this replacement cycle only represents a general guideline and does not imply that the life expectancy of this part is guaranteed. For details on part replacement, contact Sony service or your dealer.

Cleaning the Cabinet

Note

Before cleaning the printer, be sure to turn off the power and disconnect the power cord.

When the cabinet becomes dirty

When solvents such as benzene or thinner, or acid, alkaline or abrasive detergent, or chemical cleaning cloths are used on the printer surface, the surface finish may be damaged. Take care with respect to the following:

- Clean the printer surface with a 50 to 70 v/v% concentration of isopropyl alcohol or a 76.9 to 81.4 v/v% concentration of ethanol.
- Stubborn stains may be removed with a soft cloth such as a cleaning cloth lightly dampened with mild detergent solution and then clean using the above chemical solution.

- Do not use unnecessary force to rub the printer surface with a stained cloth. The printer surface may be scratched.
- Do not keep the printer surface in contact with a rubber or vinyl resin product for a long period of time. The surface finish may deteriorate or the coating may come off.

Cleaning the Thermal Head

Caution

Do not touch any unit circuitry and the patient at the same time.
If the unit malfunctions, it may generate voltage that could be harmful to the patient.

If white stripes appear on the printouts, clean the thermal head using the cleaning sheet supplied.
Carry out the thermal head cleaning operation using the menu.

1 Press the ⏻ power on/off switch to turn the unit on.

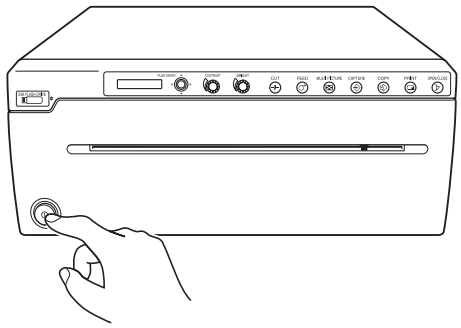

2 Press the OPEN/CLOSE button to open the paper door.

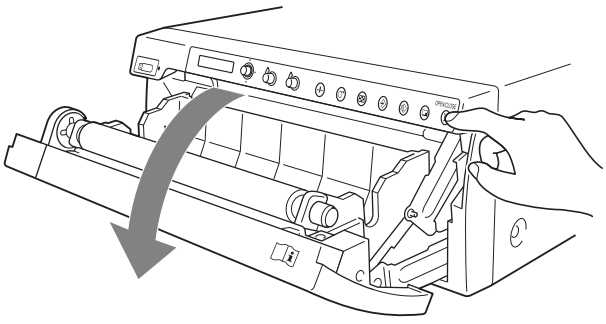

3 Insert the supplied cleaning sheet, with the black surface facing down, into the groove of the paper tray so that a small portion of the front edge of the sheet protrudes from the paper exit.

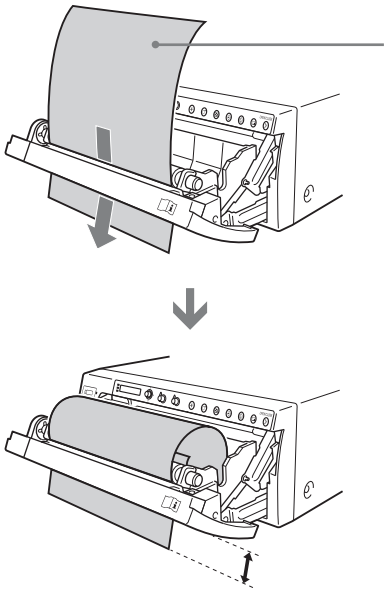

4 Press the OPEN/CLOSE button to close the paper door.

5 Press the menu lever.
The first menu item “HISTORY” is displayed on the LCD.

6 Display “CLEAN.TH” by turning the menu lever up or down, and then press the menu lever.

7 Confirm that “CLEAN:OK” is displayed, and then press the menu lever.
The unit starts cleaning the thermal head.
“CLEAN.TH” is displayed on the LCD.
The cleaning sheet stops, and the cleaning is completed.

8 Press the OPEN/CLOSE button to open the paper door and remove the cleaning sheet.

9 Press the OPEN/CLOSE button to close the paper door.

Note

Clean the thermal head only when necessary. If you clean the thermal head too frequently, it may cause a malfunction.

Cleaning the Platen Roller

If the paper cannot be fed smoothly when printing, the platen roller may be dirty.

In such a case, clean the platen roller with a soft cloth soaked in a 76.9 to 81.4 v/v% concentration of ethanol.

1 Press the ⏻ power on/off switch to turn the unit on.

2 Press the OPEN/CLOSE button to open the paper door.

3 Clean the platen roller gently with a damp cloth soaked in ethanol.

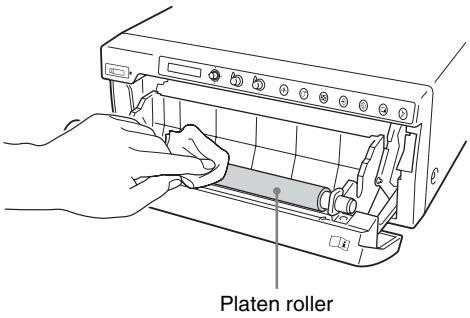

Notes

- After the surface of the platen roller wiped has been dried completely, turn the platen roller to clean another portion.
- Turn the platen roller by hand.

4 Press the OPEN/CLOSE button to close the paper door.

Paper

Use only Sony UPP-210SE/UPP-210HD paper designed for use with this unit. High print quality cannot be guaranteed if any other paper is used with this unit, and such paper could damage the unit.

Paper You Can Use

Print paper characteristics are as follows.

Print Characteristics	Paper Type
Thermal Print Media (Normal)	UPP-210SE
Thermal Print Media (High Density)	UPP-210HD

Notes on storing and handling paper

Do not re-use
Doing so may result in malfunction and negatively affect printing results.

Storing unused paper

- Store unused paper at a temperature below 30°C (86°F) in a dry location that is not exposed to direct sunlight.
- Do not store unused paper near volatile liquids or allow the paper to contact any organic volatile liquid, cellophane tape, or any compound of vinyl chloride.

Loading paper

- Handle the paper carefully when loading to avoid touching the printing surface with your fingers. Perspiration or oil from you hands could cause pictures to blur.
- After removing the label from the leading edge of the paper, pull the paper out 15~20 cm (about 6~8 in.) before printing. Label adhesive remaining on the paper could spoil a picture.

Storing printouts

- To prevent printouts from fading or changing color, store them in a cool, dry location where the temperature is not higher than 30°C (86°F).
- Store printouts in a polypropylene pouch or between sheets of paper that contain no plastic.
- Do not store printouts where they will be exposed to direct sunlight or high humidity.
- Do not store printouts near volatile liquids or allow the prints to contact cellophane tape, or any compound of vinyl chloride.
- To prevent fading, do not stack printouts on or under a diazo copy sheet.
- To mount printouts on another sheet of paper, use double-sided tape or a water base adhesive.
- Do not incinerate.

• When you dispose of printing paper, you must obey the laws in the relative area or country and the regulations in the relative hospital.

Specifications

UP-991AD

Power Requirements
100 V to 240 V ∿, 50/60 Hz
Input Current 2.9 A to 1.2 A
Operating Temperature
5 °C to 35 °C (41 °F to 95 °F)
Operating Humidity
20% to 80% (no condensation allowed)
Operating Pressure
700 hPa to 1,060 hPa
Storage and Transport Temperature
–20 °C to +60 °C (–4 °F to +140 °F)
Storage and Transport Humidity
20% to 80% (no condensation allowed)
Storage and Transport Pressure
700 hPa to 1,060 hPa
Dimensions 316 × 132.5 × 265 mm (w/h/d)
(12 1/2 × 5 1/4 × 10 1/2 inches)
Mass 7 kg (15 lb 7 oz) (printer only)
Thermal head Thin-film thermal head, 2,816 dots
Gradation 256-level gradation (8-bit)
Resolution NTSC: 720 × 504 dots
PAL: 720 × 604 dots
Picture size When “SIDE:OFF” is selected from “SIDE”
NTSC: 192 × 144 mm
PAL: 188 × 140 mm
When “SIDE:ON” is selected from “SIDE”
NTSC: 244 × 184 mm
PAL: 244 × 183 mm
Printing speed About 8 sec./image
(at standard setting)
Input connector VIDEO IN (BNC type)
NTSC or PAL composite signals
1.0 Vp-p, 75 ohms (NTSC/PAL automatically discriminated)
Output connector
VIDEO OUT (BNC type)
Loop-through output VIDEO IN
(automatic termination)
REMOTE connector (stereo mini jack)

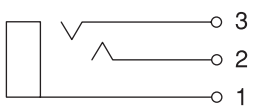

1 GND
2 PRINT SIGNAL (TTL)
Input of LOW pulse over 100 msec. initiates print.
3 PRINT BUSY (TTL)
Goes HIGH during printing.

Addition of interface
Hi-Speed USB (USB 2.0 compatible)
USB memory terminal
For USB Flash Drive use
Accessories provided
Thermal head cleaning sheet (1)
Thermal Print Media (UPP-210HD) (1)
CD-ROM (Instructions for Use, printer driver, printer driver install guide) (1)
Before Using this Printer (1)
Service Contact List (1)
Information for Customers in Europe (1)
Optional accessories
Thermal Print Media: UPP-210SE
Thermal Print Media: UPP-210HD
Remote commander RM-91 1)
Foot switch FS-24 1)
Wireless Print System UPA-WU10 2)

1) Discontinued product. For details about product availability, contact your nearest Sony dealer.
2) For about the availability of product, contact your Sony dealer.

UP-971AD

Power Requirements
100 V to 240 V ∼, 50/60 Hz
Input Current 2.9 A to 1.2 A
Operating Temperature
5 °C to 35 °C (41 °F to 95 °F)
Operating Humidity
20% to 80% (no condensation allowed)
Operating Pressure
700 hPa to 1,060 hPa
Storage and Transport Temperature
–20 °C to +60 °C (–4 °F to +140 °F)
Storage and Transport Humidity
20% to 80% (no condensation allowed)
Storage and Transport Pressure
700 hPa to 1,060 hPa
Dimensions 316 × 132.5 × 265 mm (w/h/d)
(12 1/2 × 5 1/4 × 10 1/2 inches)
Mass 7 kg (15 lb 7 oz) (printer only)
Thermal head Thin-film thermal head, 2,816 dots
Gradation 256-level gradation (8-bit)
Resolution NTSC: 720 × 504 dots
PAL: 720 × 604 dots
Picture size When the “SIDE:OFF” is set in the “SIDE” menu;
NTSC: 192 × 144 mm
PAL: 188 × 140 mm
When the “SIDE:ON” is set in the “SIDE” menu;
NTSC: 244 × 184 mm
PAL: 244 × 183 mm
Printing speed About 8 sec./image (at standard setting)
Input connector VIDEO IN (BNC type)
NTSC or PAL composite signals
1.0 Vp-p, 75 ohms (NTSC/PAL automatically discriminated)
Output connector
VIDEO OUT (BNC type)
Loop-through output VIDEO IN (the automatic termination)
REMOTE connector (stereo mini jack)

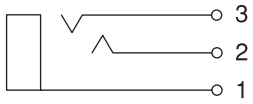

1 GND
2 PRINT SIGNAL (TTL)
Input of LOW pulse over 100 msec. initiates print.
3 PRINT BUSY (TTL)
Goes HIGH during printing

Addition of interface
Hi-Speed USB (USB 2.0 compatible)
Accessories provided
Thermal head cleaning sheet (1)
Thermal Print Media (UPP-210HD) (1)
CD-ROM (Instructions for Use, printer driver, printer driver install guide) (1)
Before Using this Printer (1)
Service Contact List (1)
Information for Customers in Europe (1)
Optional accessories
Thermal Print Media: UPP-210SE
Thermal Print Media: UPP-210HD
Remote commander RM-91 1)
Foot switch FS-24 1)
Wireless Print System UPA-WU10 2)

1) Discontinued product. For details about product availability, contact your nearest Sony dealer.
2) For about the availability of product, contact your Sony dealer.

Caution

Do not use the FS-24 in a place (such as an operating room) exposed to liquids, etc., since the FS-24 conforms to IPX3 waterproof Ingress Protection Rating. In such a place, use a product which conforms to IPX6 or higher.

Medical Specifications

Protection against electric shock:
Class I
Protection against harmful ingress of water:
Ordinary

Degree of safety in the presence of a flammable anesthetic mixture with air or with oxygen or nitrous oxide:
Not suitable for use in the presence of a flammable anesthetic mixture with air or with oxygen or nitrous oxide

Mode of operation:
Continuous

The design and these specifications are subject to change without prior notification.

Notes

- Always verify that the unit is operating properly before use.
  SONY WILL NOT BE LIABLE FOR DAMAGES OF ANY KIND INCLUDING, BUT NOT LIMITED TO, COMPENSATION OR REIMBURSEMENT ON ACCOUNT OF FAILURE TO PRINT CONTENT OF ANY TYPE OR LOSS OF DATA DUE TO FAILURE OF THIS UNIT OR ITS PRINTING MEDIA, ASSOCIATED SOFTWARE, EXTERNAL STORAGE, OR OTHER EXTERNAL DEVICE.
- SONY WILL NOT BE LIABLE FOR DAMAGES OF ANY KIND INCLUDING, BUT NOT LIMITED TO, COMPENSATION OR REIMBURSEMENT ON ACCOUNT OF THE LOSS OF PRESENT OR PROSPECTIVE PROFITS DUE TO FAILURE OF THIS UNIT, EITHER DURING THE WARRANTY PERIOD OR AFTER EXPIRATION OF THE WARRANTY, OR FOR ANY OTHER REASON WHATSOEVER.
- SONY WILL NOT BE LIABLE FOR CLAIMS OF ANY KIND MADE BY USERS OF THIS UNIT OR MADE BY THIRD PARTIES.
- SONY WILL NOT BE LIABLE FOR THE TERMINATION OR DISCONTINUATION OF ANY SERVICES RELATED TO THIS UNIT THAT MAY RESULT DUE TO CIRCUMSTANCES OF ANY KIND.

If the unit is suddenly taken from a cold to a warm location, or if ambient temperature suddenly rises, moisture may form on the outer surface of the unit and/or inside of the unit. This is known as condensation. If condensation occurs, turn off the unit and wait until the condensation clears before operating the unit. Operating the unit while condensation is present may damage the unit.

The fan and battery are consumable parts that will need periodic replacement.
When operating at room temperature, a normal replacement cycle will be about 5 years.
However, this replacement cycle represents only a general guideline and does not imply that the life expectancy of these parts is guaranteed. For details on part replacement, contact Sony service or your dealer.

The life expectancy of the electrolytic capacitor is about 5 years under normal operating temperatures and normal usage (8 hours per day; 25 days per month). If usage exceeds the above normal usage frequency, the life expectancy may be reduced correspondingly.

If this unit is to be used together with devices that emit strong radio waves, such as a radio knife, always verify that the unit is operating properly before use and ensure that there is no failure of the unit.

SONY WILL NOT BE LIABLE FOR DAMAGES OF ANY KIND RESULTING FROM A FAILURE TO IMPLEMENT PROPER SECURITY MEASURES ON TRANSMISSION DEVICES, UNAVOIDABLE DATA LEAKS RESULTING FROM TRANSMISSION SPECIFICATIONS, OR SECURITY PROBLEMS OF ANY KIND.



The supplied Thermal Print Media (High Density) (UPP-210HD) is used for test operation of the unit. Note that discoloration may occur depending on the transportation and storage environment. To achieve printing performance in accordance with the specifications, purchase the printer paper (sold separately) (page 39).

License

“zlib”, “FreeType” and “ttfautohint” software are provided in this unit. We provide this software based on license agreements with their owners of copyright. Based on requests by the owners of copyright of these software applications, we have an obligation to inform you of the following.

zlib

(C) 1995-2017 Jean-loup Gailly and Mark Adler

This software is provided 'as-is', without any express or implied warranty. In no event will the authors be held liable for any damages arising from the use of this software.

Permission is granted to anyone to use this software for any purpose, including commercial applications, and to alter it and redistribute it freely, subject to the following restrictions:

1. The origin of this software must not be misrepresented; you must not claim that you wrote the original software. If you use this software in a product, an acknowledgment in the product documentation would be appreciated but is not required.
2. Altered source versions must be plainly marked as such, and must not be misrepresented as being the original software.
3. This notice may not be removed or altered from any source distribution.

Jean-loup Gailly Mark Adler
jloup@gzip.org madler@alumni.caltech.edu

If you use the zlib library in a product, we would appreciate *not* receiving lengthy legal documents to sign. The sources are provided for free but without warranty of any kind. The library has been entirely written by Jean-loup Gailly and Mark Adler; it does not include third-party code.

If you redistribute modified sources, we would appreciate that you include in the file ChangeLog history information documenting your changes. Please read the FAQ for more information on the distribution of modified source versions.

FreeType

The FreeType Project LICENSE

2006-Jan-27

Copyright 1996-2002, 2006 by
David Turner, Robert Wilhelm, and Werner Lemberg

Introduction
==========

The FreeType Project is distributed in several archive packages; some of them may contain, in addition to the FreeType font engine, various tools and contributions which rely on, or relate to, the FreeType Project.

This license applies to all files found in such packages, and which do not fall under their own explicit license. The license affects thus the FreeType font engine, the test programs, documentation and makefiles, at the very least.

This license was inspired by the BSD, Artistic, and IJG (Independent JPEG Group) licenses, which all encourage inclusion and use of free software in commercial and freeware products alike. As a consequence, its main points are that:

o We don't promise that this software works. However, we will be interested in any kind of bug reports. (`as is' distribution)

o You can use this software for whatever you want, in parts or full form, without having to pay us. (`royalty-free' usage)

o You may not pretend that you wrote this software. If you use it, or only parts of it, in a program, you must acknowledge somewhere in your documentation that you have used the FreeType code. (`credits')

We specifically permit and encourage the inclusion of this software, with or without modifications, in commercial products. We disclaim all warranties covering The FreeType Project and assume no liability related to The FreeType Project.

Finally, many people asked us for a preferred form for a credit/disclaimer to use in compliance with this license. We thus encourage you to use the following text:

"""
Portions of this software are copyright © <year> The FreeType Project (www.freetype.org). All rights reserved.
"""

Please replace <year> with the value from the FreeType version you actually use.

Legal Terms
==========

0. Definitions

Throughout this license, the terms `package', `FreeType Project', and `FreeType archive' refer to the set of files originally distributed by the authors (David Turner, Robert Wilhelm, and Werner Lemberg) as the `FreeType Project', be they named as alpha, beta or final release.

`You' refers to the licensee, or person using the project, where `using' is a generic term including compiling the project's source code as well as linking it to form a `program' or `executable'. This program is referred to as `a program using the FreeType engine'.

This license applies to all files distributed in the original FreeType Project, including all source code, binaries and documentation, unless otherwise stated in the file in its original, unmodified form as distributed in the original archive. If you are unsure whether or not a particular file is covered by this license, you must contact us to verify this.

The FreeType Project is copyright (C) 1996-2000 by David Turner, Robert Wilhelm, and Werner Lemberg. All rights reserved except as specified below.

1. No Warranty

THE FREETYPE PROJECT IS PROVIDED `AS IS' WITHOUT WARRANTY OF ANY KIND, EITHER EXPRESS OR IMPLIED, INCLUDING, BUT NOT LIMITED TO, WARRANTIES OF MERCHANTABILITY AND FITNESS FOR A PARTICULAR PURPOSE. IN NO EVENT WILL ANY OF THE AUTHORS OR COPYRIGHT HOLDERS BE LIABLE FOR ANY DAMAGES CAUSED BY THE USE OR THE INABILITY TO USE, OF THE FREETYPE PROJECT.

2. Redistribution

This license grants a worldwide, royalty-free, perpetual and irrevocable right and license to use, execute, perform, compile, display, copy, create derivative works of, distribute and sublicense the FreeType Project (in both source and object code forms) and derivative works thereof for any purpose; and to authorize others to exercise some or all of the rights granted herein, subject to the following conditions:

o Redistribution of source code must retain this license file (`FTL.TXT') unaltered; any additions, deletions or changes to the original files must be clearly indicated in accompanying documentation. The copyright notices of the unaltered, original files must be preserved in all copies of source files.

o Redistribution in binary form must provide a disclaimer that states that the software is based in part of the work of the FreeType Team, in the distribution documentation. We also encourage you to put an URL to the FreeType web page in your documentation, though this isn't mandatory.

These conditions apply to any software derived from or based on the FreeType Project, not just the unmodified files. If you use our work, you must acknowledge us. However, no fee need be paid to us.

3. Advertising

Neither the FreeType authors and contributors nor you shall use the name of the other for commercial, advertising, or promotional purposes without specific prior written permission.

We suggest, but do not require, that you use one or more of the following phrases to refer to this software in your documentation or advertising materials: `FreeType Project', `FreeType Engine', `FreeType library', or `FreeType Distribution'.

As you have not signed this license, you are not required to accept it. However, as the FreeType Project is copyrighted material, only this license, or another one contracted with the authors, grants you the right to use, distribute, and modify it. Therefore, by using, distributing, or modifying the FreeType Project, you indicate that you understand and accept all the terms of this license.

4. Contacts

There are two mailing lists related to FreeType:

o freetype@nongnu.org

Discusses general use and applications of FreeType, as well as future and wanted additions to the library and distribution. If you are looking for support, start in this list if you

haven't found anything to help you in the documentation.

o freetype-devel@nongnu.org

Discusses bugs, as well as engine internals, design issues, specific licenses, porting, etc.

Our home page can be found at

https://www.freetype.org

--- end of FTL.TXT ---

ttfautohint

Copyright (C) 2011-2019 by Werner Lemberg.

The FreeType Project LICENSE

2006-Jan-27

Copyright 1996-2002, 2006 by
David Turner, Robert Wilhelm, and Werner Lemberg

Introduction
==========

The FreeType Project is distributed in several archive packages; some of them may contain, in addition to the FreeType font engine, various tools and contributions which rely on, or relate to, the FreeType Project.

This license applies to all files found in such packages, and which do not fall under their own explicit license. The license affects thus the FreeType font engine, the test programs, documentation and makefiles, at the very least.

This license was inspired by the BSD, Artistic, and IJG (Independent JPEG Group) licenses, which all encourage inclusion and use of free software in commercial and freeware products alike. As a consequence, its main points are that:

o We don't promise that this software works. However, we will be interested in any kind of bug reports. (`as is' distribution)

o You can use this software for whatever you want, in parts or full form, without having to pay us. (`royalty-free' usage)

o You may not pretend that you wrote this software. If you use it, or only parts of it, in a program, you must acknowledge somewhere in your documentation that you have used the FreeType code. (`credits')

We specifically permit and encourage the inclusion of this software, with or without modifications, in commercial products. We disclaim all warranties covering The FreeType Project and assume no liability related to The FreeType Project.

Finally, many people asked us for a preferred form for a credit/disclaimer to use in compliance with this license. We thus encourage you to use the following text:

```
"""
Portions of this software are copyright © <year> The FreeType
Project (www.freetype.org). All rights reserved.
"""
```

Please replace <year> with the value from the FreeType version you actually use.

Legal Terms
==========

0. Definitions

Throughout this license, the terms `package', `FreeType Project', and `FreeType archive' refer to the set of files originally distributed by the authors (David Turner, Robert Wilhelm, and Werner Lemberg) as the `FreeType Project', be they named as alpha, beta or final release.

`You' refers to the licensee, or person using the project, where `using' is a generic term including compiling the project's source code as well as linking it to form a `program' or `executable'. This program is referred to as `a program using the FreeType engine'.

This license applies to all files distributed in the original FreeType Project, including all source code, binaries and documentation, unless otherwise stated in the file in its original, unmodified form as distributed in the original archive. If you are unsure whether or not a particular file is covered by this license, you must contact us to verify this.

The FreeType Project is copyright (C) 1996-2000 by David Turner, Robert Wilhelm, and Werner Lemberg. All rights reserved except as specified below.

1. No Warranty

THE FREETYPE PROJECT IS PROVIDED `AS IS' WITHOUT WARRANTY OF ANY KIND, EITHER EXPRESS OR IMPLIED, INCLUDING, BUT NOT LIMITED TO, WARRANTIES OF MERCHANTABILITY AND FITNESS FOR A PARTICULAR PURPOSE. IN NO EVENT WILL ANY OF THE AUTHORS OR COPYRIGHT HOLDERS BE LIABLE FOR ANY DAMAGES CAUSED BY THE USE OR THE INABILITY TO USE, OF THE FREETYPE PROJECT.

2. Redistribution

This license grants a worldwide, royalty-free, perpetual and irrevocable right and license to use, execute, perform, compile, display, copy, create derivative works of, distribute and sublicense the FreeType Project (in both source and object code forms) and derivative works thereof for any purpose; and to authorize others to exercise some or all of the rights granted herein, subject to the following conditions:

o Redistribution of source code must retain this license file (`FTL.TXT') unaltered; any additions, deletions or changes to the original files must be clearly indicated in accompanying documentation. The copyright notices of the unaltered, original files must be preserved in all copies of source files.

o Redistribution in binary form must provide a disclaimer that states that the software is based in part of the work of the FreeType Team, in the distribution documentation. We also encourage you to put an URL to the FreeType web page in your documentation, though this isn't mandatory.

These conditions apply to any software derived from or based on the FreeType Project, not just the unmodified files. If you use our work, you must acknowledge us. However, no fee need be paid to us.

3. Advertising

Neither the FreeType authors and contributors nor you shall use the name of the other for commercial, advertising, or promotional purposes without specific prior written permission.

We suggest, but do not require, that you use one or more of the following phrases to refer to this software in your documentation or advertising materials: `FreeType Project', `FreeType Engine', `FreeType library', or `FreeType Distribution'.

As you have not signed this license, you are not required to accept it. However, as the FreeType Project is copyrighted material, only this license, or another one contracted with the authors, grants you the right to use, distribute, and modify it. Therefore, by using, distributing, or modifying the FreeType Project, you indicate that you understand and accept all the terms of this license.

4. Contacts

There are two mailing lists related to FreeType:

o freetype@nongnu.org

Discusses general use and applications of FreeType, as well as future and wanted additions to the library and distribution. If you are looking for support, start in this list if you haven't found anything to help you in the documentation.

o freetype-devel@nongnu.org

Discusses bugs, as well as engine internals, design issues, specific licenses, porting, etc.

Our home page can be found at

https://www.freetype.org

--- end of FTL.TXT ---

Troubleshooting

Before you call for service, please check the problems and solutions described below. If you cannot solve the problem, contact the nearest authorized dealer.

Symptom	Causes/remedies
First few prints spotted with small dots.	New paper roll just installed? →Press the FEED button and hold it down to feed about 15~20 cm (6~8 in.) and then print. (page 17)
Pressing the PRINT button or the COPY button does not print the image.	• Paper does not feed. →Power switched on? →Unit connected correctly? (page 18, 19) →Paper roll loose? (page 17) • Alarm sounds. →Paper loaded correctly? (page 16) →Has the thermal head overheated? The thermal head may overheat when the unit prints dark images continuously. Wait until the thermal head cools down. →Is the video signal of the image input? →Did you press the COPY button in the multi-picture mode? • Paper feeds but printing does not start. →Paper loaded with the wrong side up? (page 16) • When the COPY button is pressed, an image printed just before you press the button cannot be copied. →Did you turn off the unit before you press the COPY button? When the unit is turned off, the image data stored in the unit is deleted.
Black borders or missing portions around the printout	Adjust the print area in the menu items.
Paper Jams	• Jammed paper visible? →Press the OPEN/CLOSE button to open the paper door, remove the printout or the paper roll, and then gently pull the jammed paper out of the unit. • Condensation collected in unit? →If the unit has just been brought into a warm room from a cold location, condensation may have formed inside the unit. Switch the unit off and let it set for 1 - 2 hours (until it warms to room temperature), then try printing again.
Printouts dirty.	Thermal head dirty? →Use the head cleaning sheet provided with the unit to clean the thermal head. (page 38)
The unit stops printing while printing almost black images and the message “COOLING” is displayed on the LCD.	When printing almost black images continuously, the thermal head protection circuit may shut down the unit to prevent the thermal head from overheating. →Stop printing and allow the thermal head to cool.
White lines or small letters on the screen are not printed clearly.	Is “FIED:OFF” selected in “FIELD” menu for black and white input signals? →Select “FIED:ON” when the input signal is a black and white signal. (page 23)
Small squares appear over the whole screen.	Is “COLR:OFF” selected in “COLOR” menu for color input signals? →Select “COLR:ON” when the input signal is a color signal. (page 23)
The printout is too dark or too light.	• Is the “PP.TYPE” menu item set correctly? (page 25) • Is each menu item in “ADJUST” set correctly? (page 22, 33)
The printout seems stretched or enlarged.	Is “ASPT:1:1” selected in the “ASPECT” menu item? →Select “ASPT:4:3.” (page 23)
The printing paper does not feed smoothly.	Is the platen roller dirty? →Clean the platen roller (page 38)
Menu lever does not operate menu.	Is printing in progress? →Cancel printing, or wait until printing finishes.

Error Messages

Messages appear on the LCD under the following conditions. Take the remedial actions shown next to the messages to correct the problem.

Messages	Description and remedy
DOOR	The paper door is open. →Press the OPEN/CLOSE button to close the paper door.
EMPTY	• There is no paper loaded. • Paper has been used up. →Load some paper.
COOLING	The protection circuit that prevents the thermal head from overheating has been activated. →Wait for the message to disappear. Printing will then resume automatically.
LOCK	When only the BRIGHT dial and CONTRAST dial are locked; →Keep pressing the menu lever for about three seconds and release the lock, and operate the unit. When the menu lever, BRIGHT dial, and CONTRAST dial is locked; →If you want to perform menu operations or use those controls, contact the nearest authorized dealer.
ERROR	An internal problem has occurred. →Contact the nearest authorized Sony dealer.
NO.INPUT	No video signal is input. →Input a video signal.
PAPE.ERR	The UPT-210BL is attached to the unit. →You cannot use the UPT-210BL. Use UPP-210SE or UPP-210HD printing paper.
NO.SPACE UP-991AD only	The free space for storing the data in the USB Flash Drive is not enough. →Delete the data of the USB Flash Drive in your computer, etc., increase the free space. When you do not use the Sony USB Flash Drive, change it to the Sony product.
STOR.ERR UP-991AD only	The image data writing to the USB Flash Drive is failed. →Insert the USB Flash Drive firmly to the terminal. Remove the USB Flash Drive, then insert it again. Turn the power off, then on again. When you do not use the Sony USB Flash Drive, change it to the Sony product.

Index

C

Cleaning
- cabinet 37
- platen roller 38
- thermal head 38

Cleaning sheet 38
Connections 19
- connecting to the USB connector 19
- notes 18, 19

E

Error messages 29, 46

G

Getting Started 11

L

Location and function of parts and controls
- front panel 12, 13
- rear panel 13, 14

M

Maintenance
- cleaning the cabinet 37
- cleaning the platen roller 38
- cleaning the thermal head 38

Menu
- basic operations 26
- list 22
- loading the menu settings 27
- printing the menu list 28
- storing the menu settings 27

O

Overview 11

P

Paper
- loading paper in the unit 16
- notes on storing and handling 39
- paper you can use 39

Precautions
- on installation 37
- printer carriage 37
- safety 37

Printing
- cancelling 29
- confirming paper 29
- feeding paper 29
- making copies 30
- printing multiple images 30
- selecting the printing direction 31
- setting the range of the image 31
- staring a print job 29

S

Specifications 40

T

Troubleshooting 45

U

USB Flash Drive
- file name 35
- removing 36
- storing image data 35

EU: Sony Europe B.V.
Da Vincilaan 7-D1, 1930 Zaventem, Belgium
UK: Sony Europe B.V.
The Heights, Brooklands, Weybridge,
Surrey KT13 0XW, United Kingdom
CH: Sony Europe B.V., Hoofddorp,
Schlieren/Switzerland Branch
Wiesenstrasse 5, 8952 Schlieren, Switzerland

EC REP
Sony Belgium, bijkantoor van
Sony Europe B.V.
Da Vincilaan 7-D1, 1930 Zaventem,
Belgium

UK RP
Sony Europe B.V.
The Heights, Brooklands, Weybridge,
Surrey KT13 0XW, United Kingdom

Sony Corporation
1-7-1 Konan Minato-ku Tokyo,
108-0075 Japan